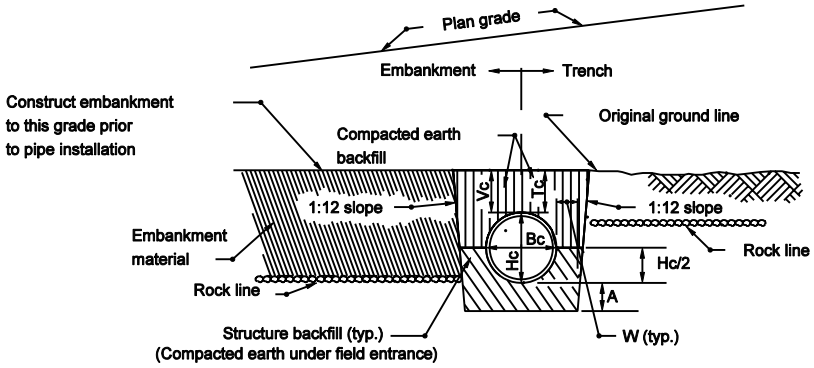

SECTION D-D
EMBANKMENT/TRENCH INSTALLATION
ROCK FOUNDATION

NOTES

1. Refer to Standard Drawing E 715-BKFL-09 for general notes.

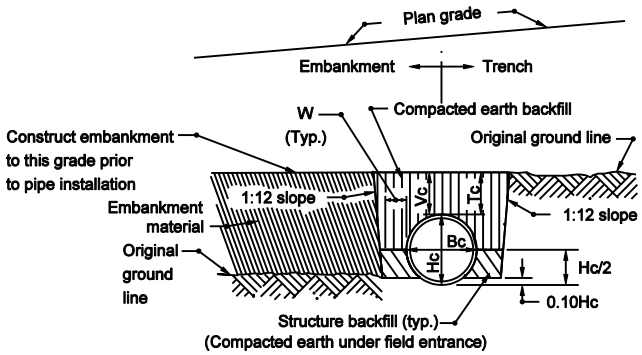

SECTION D-D
EMBANKMENT/TRENCH INSTALLATION

LEGEND

Hc	=	Overall diameter or rise
Bc	=	Overall diameter or span
A	=	8" min. for fill height up to 16'
	=	12" min. for fill height of 16' or more
Vc	=	12" for Bc ≤ 18"
	=	18" for Bc > 18"
Tc	=	Trench cover depth
W	=	0.3 Bc or 9", whichever is greater
⑦ E	=	Encasement

METHOD 2 BACKFILL

Structures under commercial and private drive approaches.

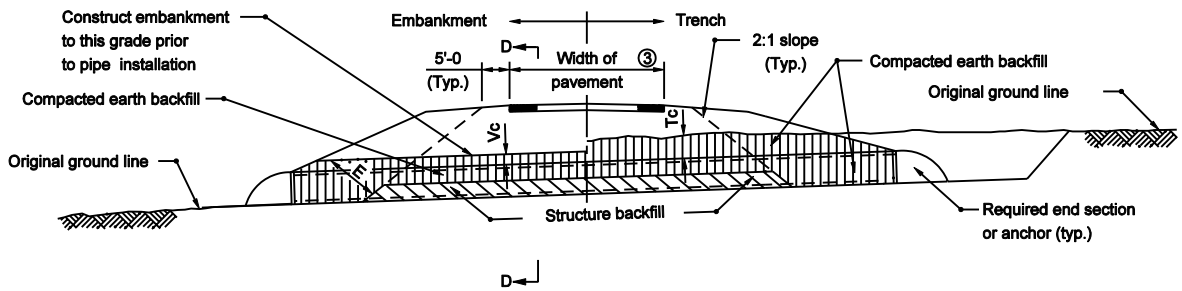

ELEVATION

INDIANA DEPARTMENT OF TRANSPORTATION

PIPE STRUCTURE BACKFILL
DRIVEWAY INSTALLATIONS

MARCH 2003

STANDARD DRAWING NO. E 715-BKFL-07

REGISTERED ANTHONY L. UREMOVICH No. 18095 STATE OF INDIANA PROFESSIONAL ENGINEER

DESIGN STANDARDS ENGINEER

/s/ Anthony L.Uremovich 3-03-03
DESIGN STANDARDS ENGINEER DATE

/s/ Richard K.Smutzer 3-03-03
CHIEF HIGHWAY ENGINEER DATE