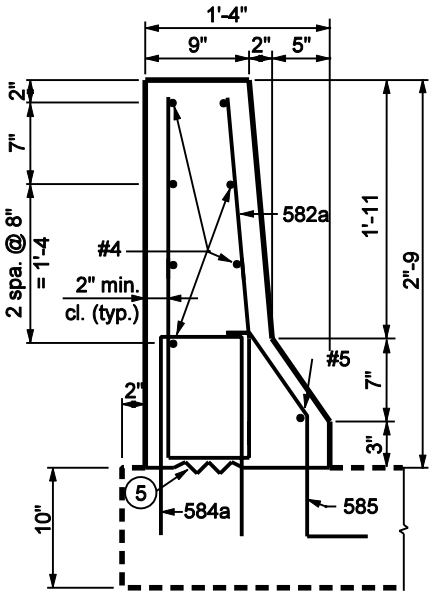

SECTION A-A

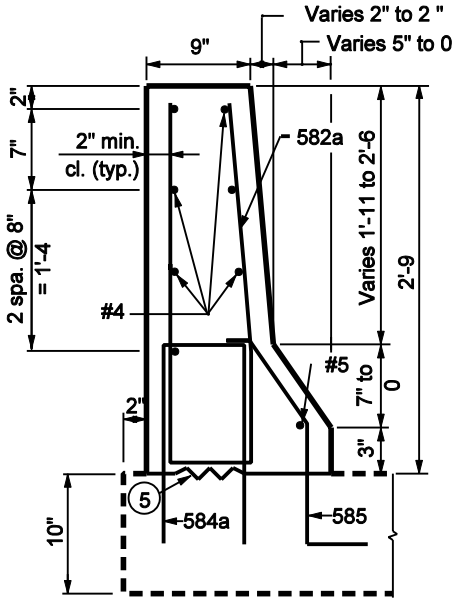

SECTION B-B

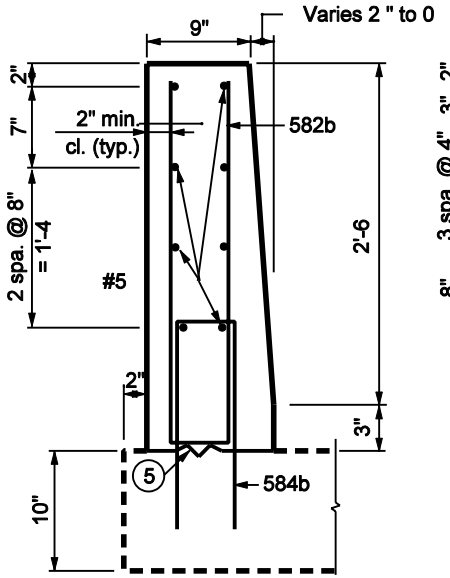

SECTION C-C

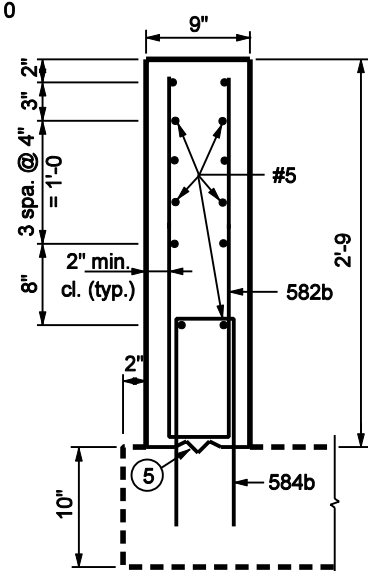

SECTION D-D

33" COMMON HEIGHT THRIE BEAM / CONCRETE BRIDGE RAILING TRANSITION

NOTES :

1. See Standard Drawing E 706-TASE-05 for General Notes.
2. See Standard Drawing E 706-TTBC-01 for Plan and Elevation and E 706-TTBC-03 for reinforcment and bill of materials.

INDIANA DEPARTMENT OF TRANSPORTATION

CONCRETE BRIDGE RAILING TRANSITION TYPE TBC

MARCH 2003

STANDARD DRAWING NO. E 706-TTBC-02

RICHARD L. VanCLEAVE REGISTERED No. 9750 STATE OF INDIANA PROFESSIONAL ENGINEER

DESIGN STANDARDS ENGINEER

/s/ Richard L. VanCleave 3-03-03
DESIGN STANDARDS ENGINEER DATE

/s/ Richard K. Smutzer 3-03-03
CHIEF HIGHWAY ENGINEER DATE