NOTES:

1. See Standard Drawing E 703-BRST-01 for standard 180° bar bending details.
2. All reinforcing bars designated "E" shall be epoxy coated.

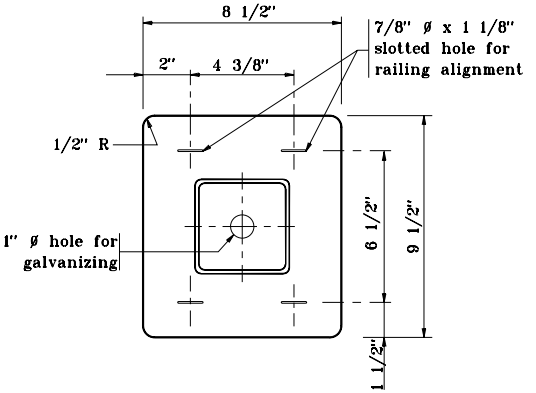

BASE PLATE DETAIL

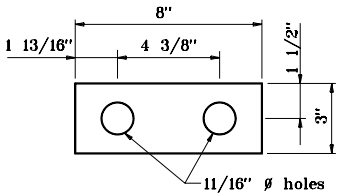

BEARING PLATE DETAIL

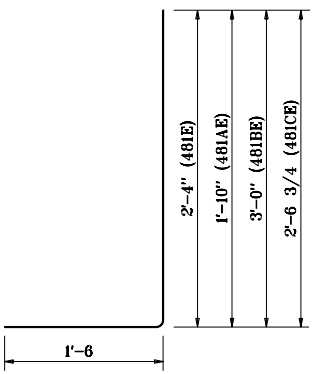

481E x 3'-10

481AE x 3'-4

481BE x 4'-6

481CE x 4'-0 3/4

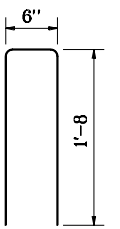

482E x 3'-10"

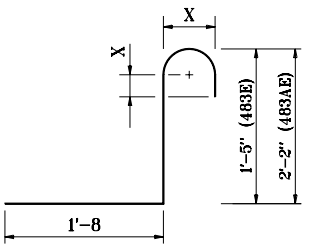

483E x 3'-10"

483AE x 4'-8"

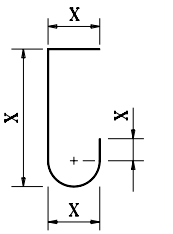

484E x 2'-8"

INDIANA DEPARTMENT OF TRANSPORTATION

RAILING, PF & PS DETAILS

MARCH 2002

STANDARD DRAWING NO. E 706-BRPP-06

RICHARD L. VanCLEAVE REGISTERED No. 9750 STATE OF INDIANA PROFESSIONAL ENGINEER

DESIGN STANDARDS ENGINEER

/s/ Richard L. VanCleave — DESIGN STANDARDS ENGINEER — 3-01-02 DATE

/s/ Richard K. Smutzer — CHIEF HIGHWAY ENGINEER — 3-01-02 DATE