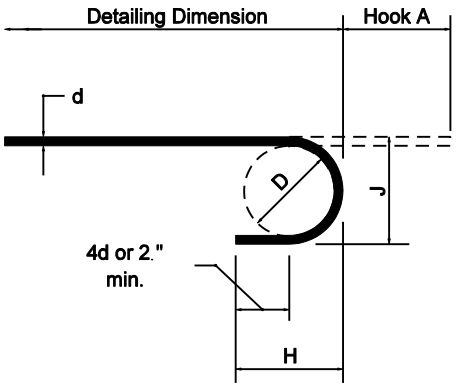

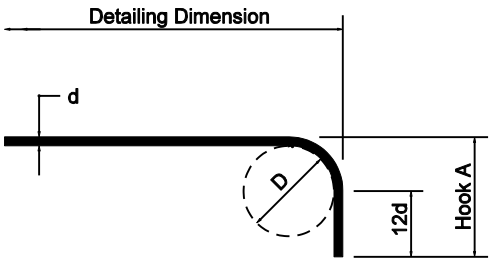

STANDARD HOOKS					
		180* HOOK			90* HOOK
BAR SIZE	D , in.	HOOK A	J	H	HOOK A
#3	2¼	5"	3"	4"	6"
#4	3¼	6"	4"	4 "	8"
#5	3¾	7"	5"	5"	10"
#6	4½	8"	6"	6"	1'-0
#7	5½	10"	7"	7"	1'-2
#8	6	11"	8"	8"	1'-4
#9	9½	1'-3	11¾ "	10½ "	1'-7
#10	11	1'-5	1'-1¾	11¾ "	1'-10
#11	12	1'-7	1'-2¾	1'-1	2'-0
#14	18½	2'-3	1'-9⅝	1'-5¾	2'-6½
#18	24	3'-0	2'-4½	1'-11¼	3'-5⅜

REINFORCING BAR NOTES

1. All dimensions on bending diagrams are measured out to out of bars.
2. All dimensions on details are measured on centerlines of bars, except where COVER is indicated.
3. Bent bars are given an alphanumeric bar mark (e.g. 588). The last two digits (e.g. 88) indicate the mark. The characters preceding the last two digits (e.g. 5) indicate the size of the bar.
4. Straight bars are designated by size and length.
5. Standard size hooks shown on this sheet to be used on all hooked bars unless noted.
6. See bridge plans or structure plans for lap and embedment lengths.

SPLICE BAR NOTES

1. All samples of reinforcing steel shall consist of bars 5'-0 in length.
2. For straight bars make cut 5'-0 from end.
3. For bent bars use bars that have straight portion longer than 120 diameters plus 6'-0 and make cuts 60 diameters plus 6" and 60 diameters plus 5'-6 from the same bend point or hooked end.
4. Splice bars to lap with bars from which test samples are cut, making laps of 60 diameters at each cut end.

INDIANA DEPARTMENT OF TRANSPORTATION

BAR BENDING DETAILS

MARCH 2003

STANDARD DRAWING NO. E 703-BRST-01

RICHARD L. VanCLEAVE REGISTERED No. 9750 STATE OF INDIANA PROFESSIONAL ENGINEER

DESIGN STANDARDS ENGINEER

/s/ Richard L. VanCleave 3-03-03
DESIGN STANDARDS ENGINEER DATE

/s/ Richard K. Smutzer 3-03-03
CHIEF HIGHWAY ENGINEER DATE