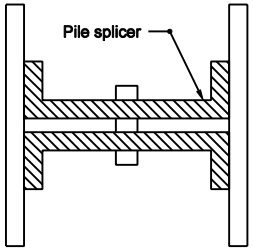

PLAN

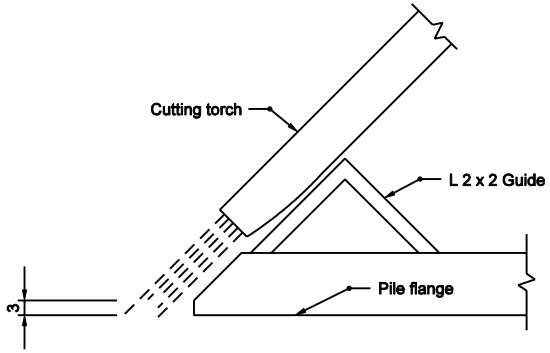

SUGGESTED METHOD
TO BEVEL FLANGE

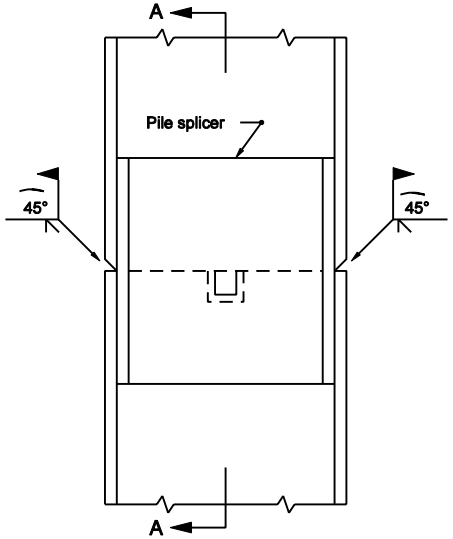

ELEVATION

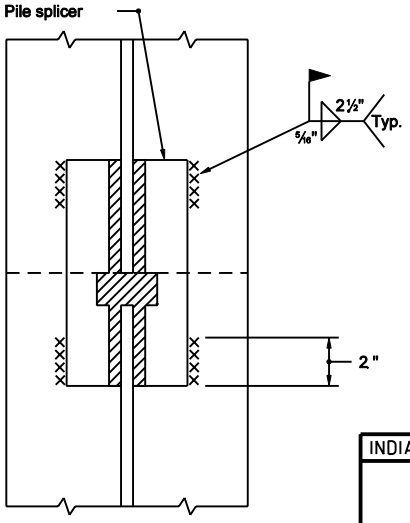

SECTION A-A

ALTERNATE STEEL H PILE SPLICE
USING COMMERCIAL PILE SPLICER

INDIANA DEPARTMENT OF TRANSPORTATION

ALTERNATE STEEL
H-PILE SPLICE

SEPTEMBER 2003

STANDARD DRAWING NO. E 701-BPIL-06

RICHARD L. VanCLEAVE
REGISTERED
No. 9750
STATE OF
INDIANA
PROFESSIONAL ENGINEER

DESIGN STANDARDS ENGINEER

/s/ Richard L. VanCleave 9-02-03
DESIGN STANDARDS ENGINEER DATE

/s/ Richard K. Smutzer 9-02-03
CHIEF HIGHWAY ENGINEER DATE