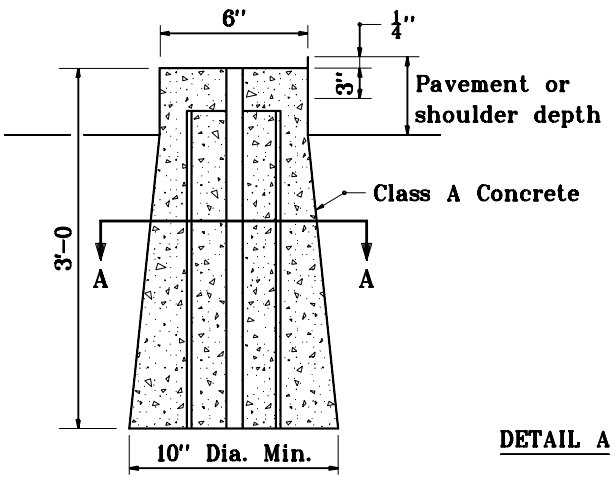

DETAIL A

INSIDE PAVEMENT OR SHOULDER AREA

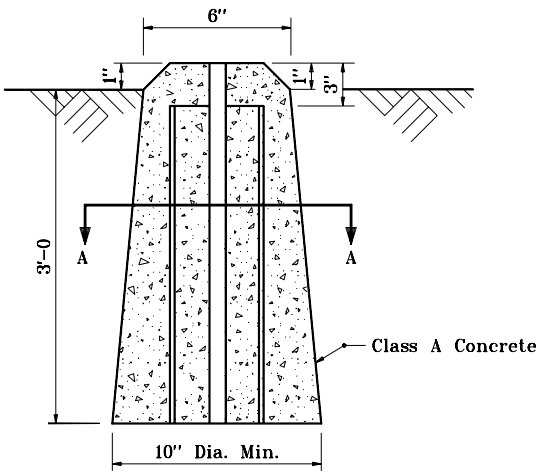

OUTSIDE PAVEMENT OR SHOULDER AREA

NEW SECTION CORNER MONUMENT INSTALLATION

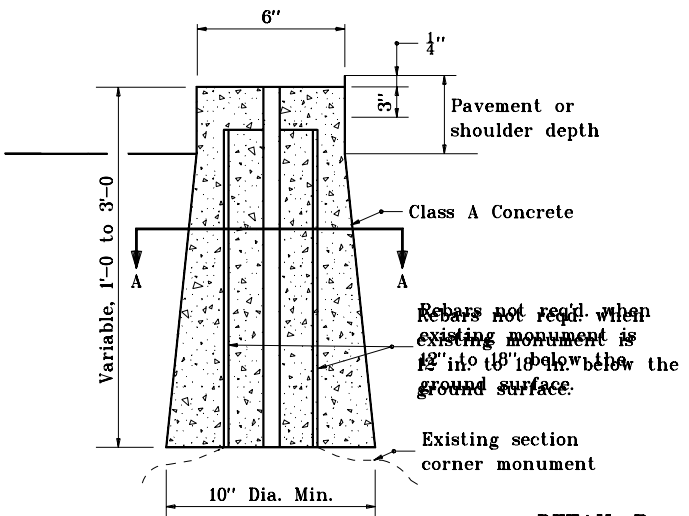

DETAIL B

INSIDE PAVEMENT OR SHOULDER AREA

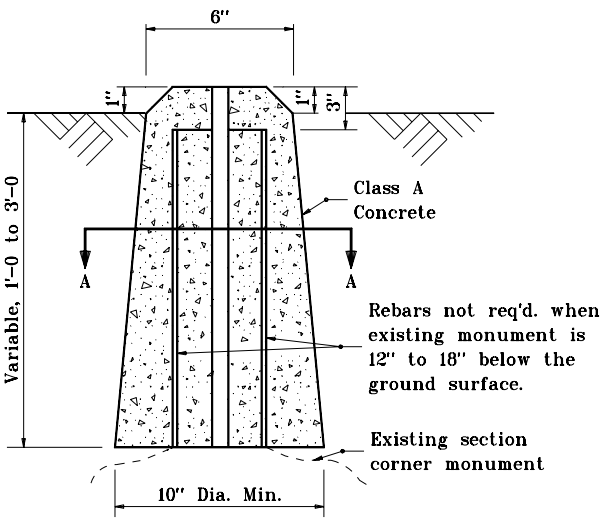

OUTSIDE PAVEMENT OR SHOULDER AREA

EXTENSION OF EXISTING SECTION CORNER MONUMENT

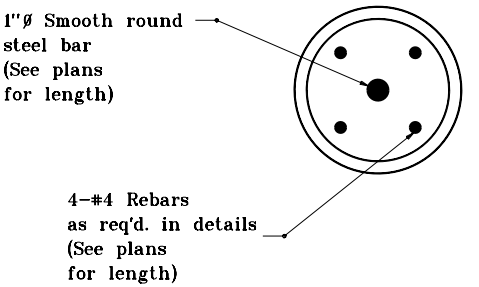

SECTION A-A

NOTES

1. If the existing section corner monument is 0 to 1 ft below surface, it shall be removed and replaced as shown in Detail A.

2. If the existing section corner monument is over 1 ft to 3 ft below surface, the county surveyor shall determine whether it shall remain in place or be replaced. If the monument is to be replaced, the installation shall be as shown in Detail A. If the existing monument is to remain in place, it shall be extended as shown in Detail A.

INDIANA DEPARTMENT OF TRANSPORTATION

SECTION CORNER MONUMENTS

APRIL 1995

STANDARD DRAWING NO. E 615-SCMN-01

ANTHONY L. UREMOVICH REGISTERED No. 18095 STATE OF INDIANA PROFESSIONAL ENGINEER

DESIGN STANDARDS ENGINEER

DETAILS PLACED IN THIS FORMAT 11-15-99

/s/ Anthony L. Uremovich 11-15-99
DESIGN STANDARDS ENGINEER DATE

/s/ Firooz Zandi 11-15-99
CHIEF HIGHWAY ENGINEER DATE

ORIGINALLY APPROVED 4-03-95