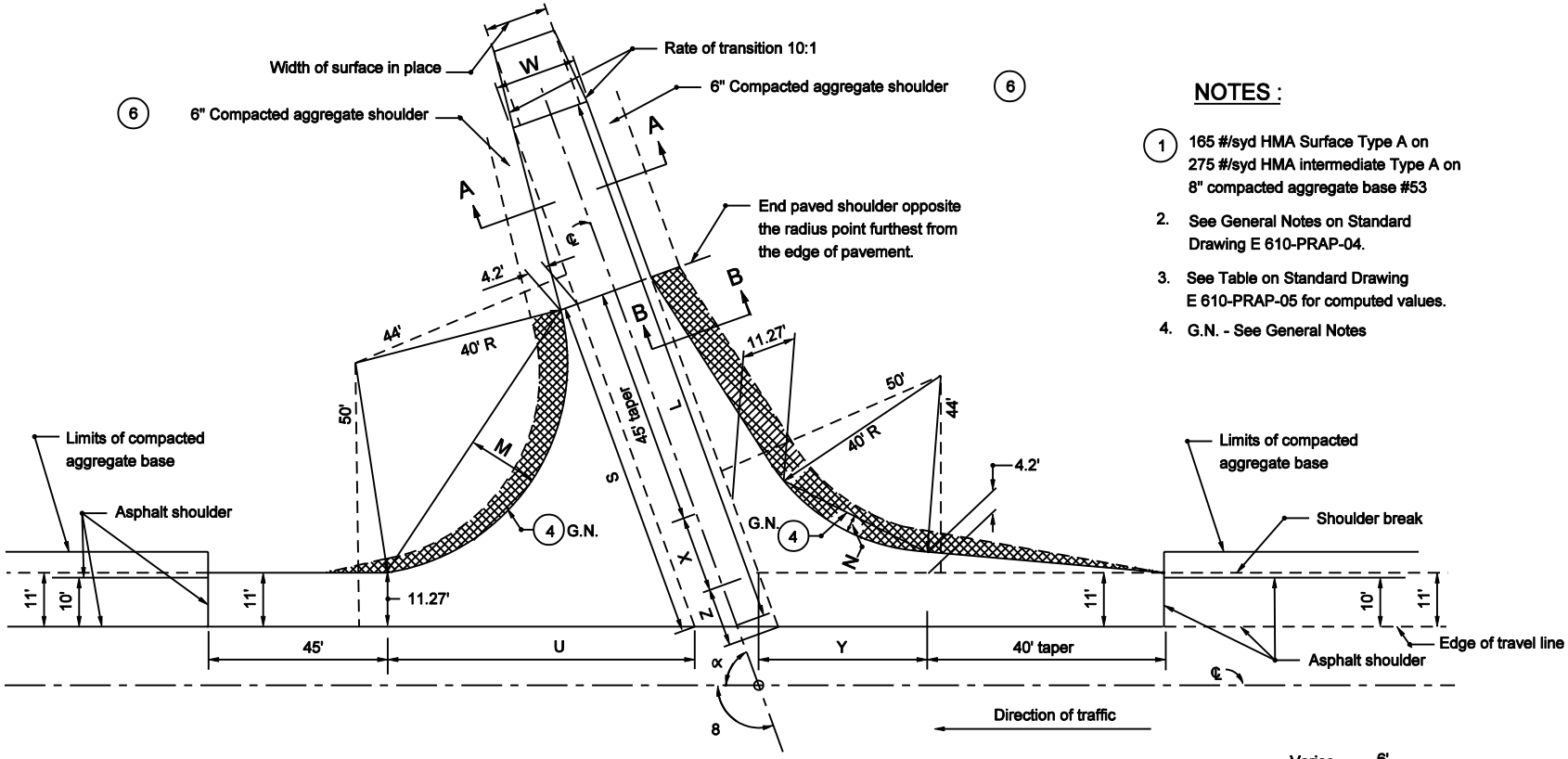

NOTES :

1. 165 #/syd HMA Surface Type A on 275 #/syd HMA intermediate Type A on 8" compacted aggregate base #53
2. See General Notes on Standard Drawing E 610-PRAP-04.
3. See Table on Standard Drawing E 610-PRAP-05 for computed values.
4. G.N. - See General Notes

PUBLIC ROAD APPROACH TYPE "B"

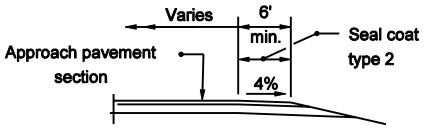

SECTION B-B

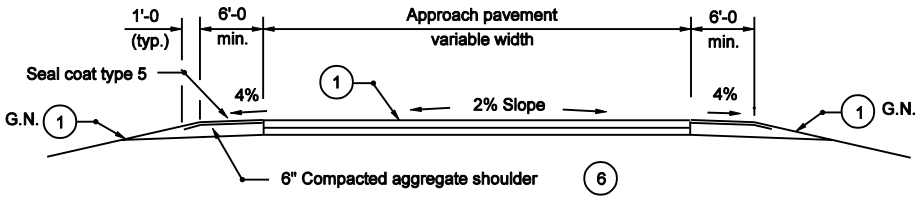

SECTION A-A MINIMUM PAVEMENT SECTION

For ADT $\leq$ 1000 (7)

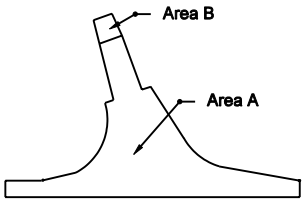

PAY LIMITS FOR HMA FOR APPROACHES

INDIANA DEPARTMENT OF TRANSPORTATION

PUBLIC ROAD APPROACH TYPE B

MARCH 2003

STANDARD DRAWING NO. E 610-PRAP-03

RICHARD L. VanCLEAVE REGISTERED No. 9750 STATE OF INDIANA PROFESSIONAL ENGINEER

DESIGN STANDARDS ENGINEER

/s/ Richard L. VanCleave 3-03-03
DESIGN STANDARDS ENGINEER DATE

/s/ Richard K. Smutzer 3-03-03
CHIEF HIGHWAY ENGINEER DATE