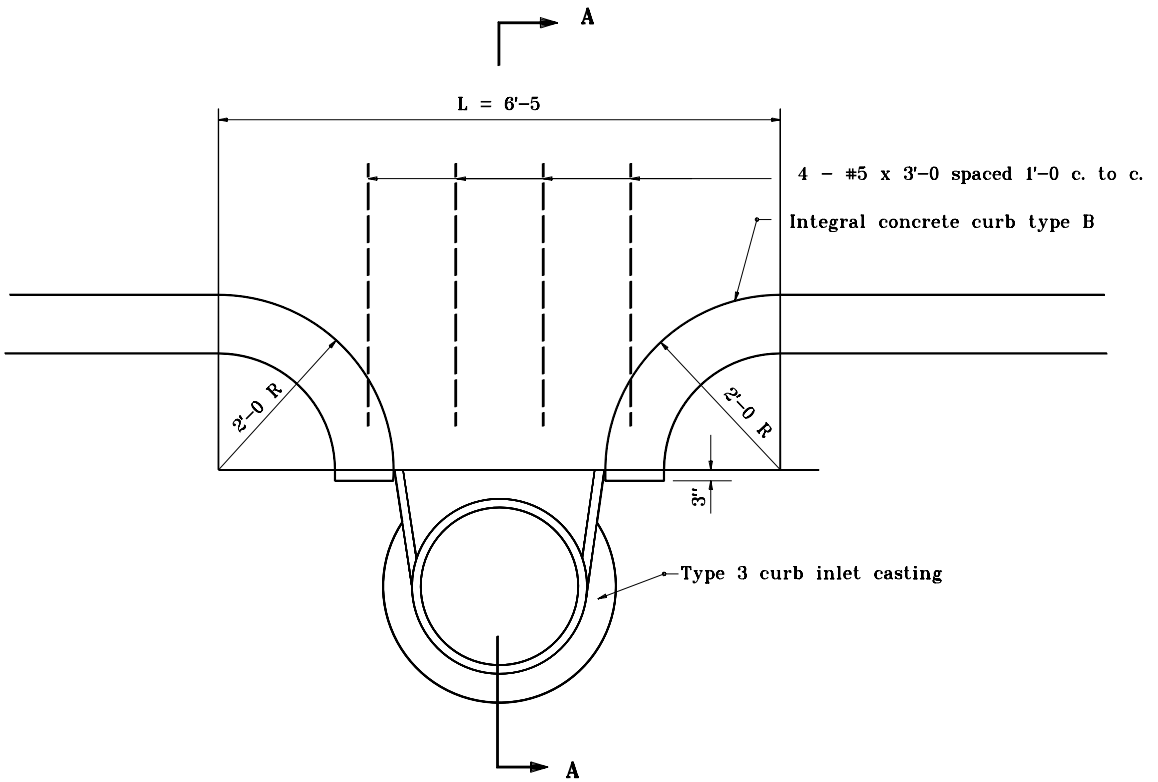

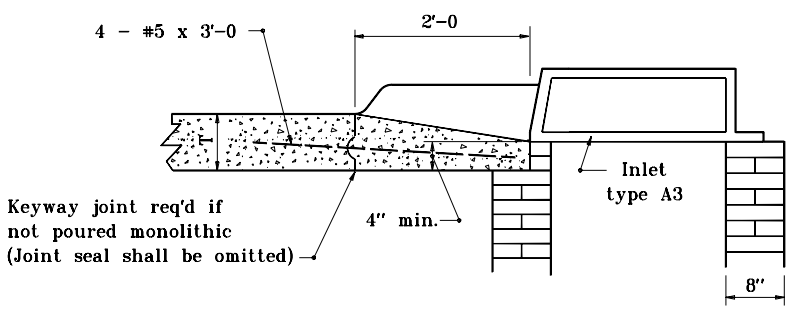

SECTION A-A

NOTES :

1. See Standard Drawing E 501-CCPJ-08 for keyway joint details.

INDIANA DEPARTMENT OF TRANSPORTATION	
CURB TURNOUT TO A3 INLET	
SEPTEMBER 1997	
STANDARD DRAWING NO. **E 605-CTIN-01**	
ANTHONY L. UREMOVICH REGISTERED No. 18095 STATE OF INDIANA PROFESSIONAL ENGINEER	DETAILS PLACED IN THIS FORMAT 11-15-99
	/s/ Anthony L. Uremovich 11-15-99 — DESIGN STANDARDS ENGINEER — DATE
	/s/ Firooz Zandi 11-15-99 — CHIEF HIGHWAY ENGINEER — DATE
DESIGN STANDARDS ENGINEER	ORIGINALLY APPROVED 9-01-97