GENERAL NOTES

1. Pavement contraction joints shall be extended through the concrete shoulder in the gore areas.

(2) Shoulder corrugations shall be omitted in this area.

3. See tables on Standard Drawing E 401-REBS-04.

4. See Standard Drawing E 501-RECS-03 for Section A-A.

CURVE DATA

△ = 2° 17′ 26″
T = 190.91′
L = 381.76′
E = 1.91′
R = 9549.30′

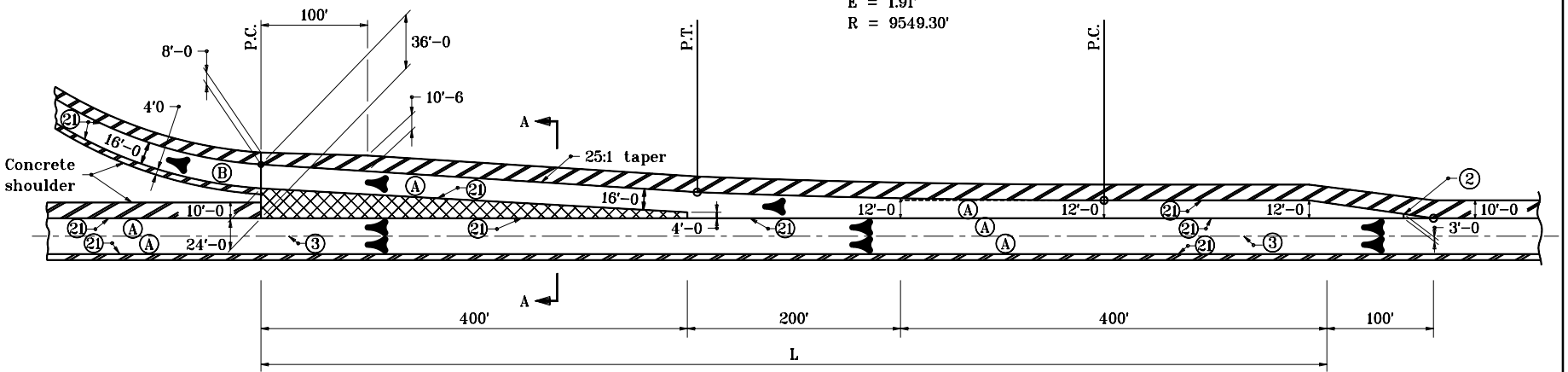

EXIT

LEGEND

(A) Pavement type and thickness as specified for the mainline.
(B) Pavement type and thickness as specified for ramps.
(3) Longitudinal joint
(21) Longitudinal construction joint
Concrete shoulder (Thickness of mainline pavement)
Concrete shoulder (Thickness as specified on Typical Sections)

INDIANA DEPARTMENT OF TRANSPORTATION

RAMP EXIT TERMINAL CONCRETE SHOULDER

SEPTEMBER 1999

STANDARD DRAWING NO. **E 501-RECS-02**

ANTHONY L. UREMOVICH REGISTERED No. 18095 STATE OF INDIANA PROFESSIONAL ENGINEER

DESIGN STANDARDS ENGINEER

DETAILS PLACED IN THIS FORMAT 11-15-99

/s/ Anthony L. Uremovich 11-15-99
DESIGN STANDARDS ENGINEER DATE

/s/ Firooz Zandi 11-15-99
CHIEF HIGHWAY ENGINEER DATE

ORIGINALLY APPROVED 9-01-99