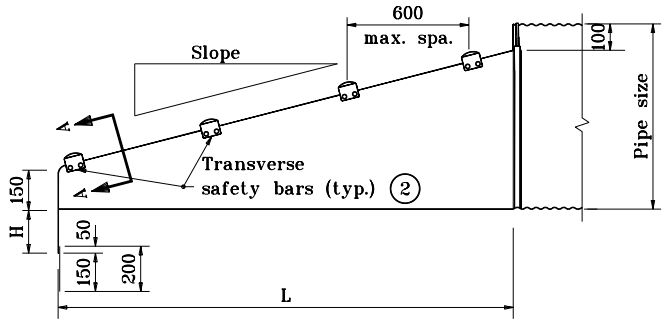

SIDE ELEVATION OF PARALLEL STRUCTURE END SECTION

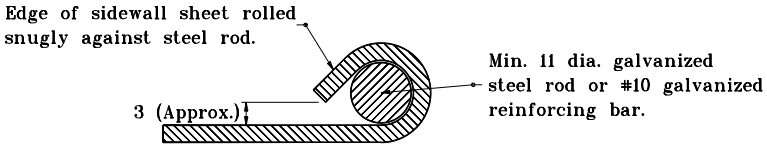

SECTION A–A

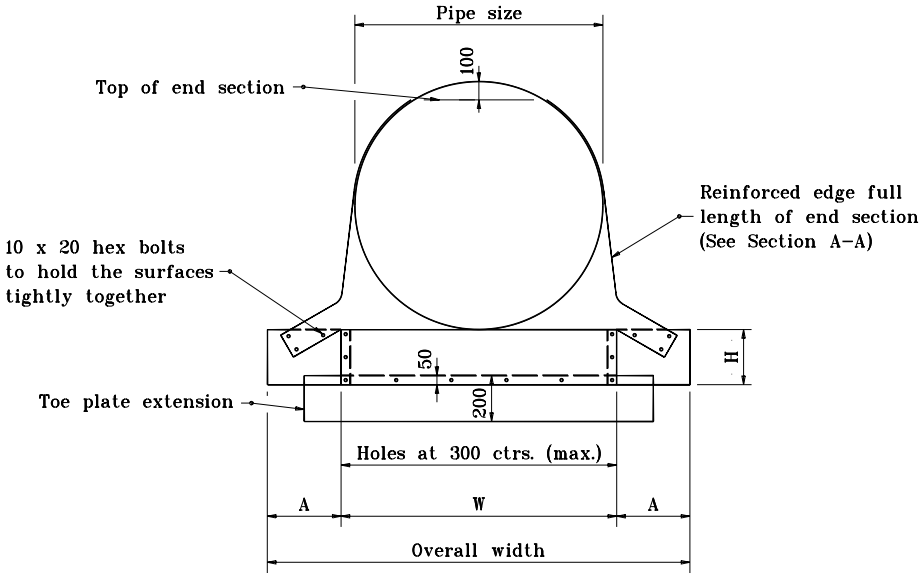

FRONT VIEW

GENERAL NOTES

1. See Standard Drawing 715–SMES–06 for variable dimensions.
2. Transverse safety bars shall be schedule 40 galvanized steel pipe. Pipe shall be galvanized after forming. Number of bars required will vary depending on the length of the end sections.
3. The toe plate extension shall be the same thickness as the end section. The dimension shall be the end section overall width less 150.

All dimensions are in mm unless otherwise specified.

INDIANA DEPARTMENT OF TRANSPORTATION

SAFETY METAL CULVERT END SECTIONS FOR CORRUGATED PIPE

JANUARY 1998

STANDARD DRAWING NO. **715–SMES–04**

ANTHONY L. UREMOVICH REGISTERED No. 18095 STATE OF INDIANA PROFESSIONAL ENGINEER

DESIGN STANDARDS ENGINEER

/s/ Anthony L. Uremovich 1–02–98
DESIGN STANDARDS ENGINEER DATE

/s/ Donald W. Lucas 1–02–98
CHIEF HIGHWAY ENGINEER DATE

Source Sheet: SMES2