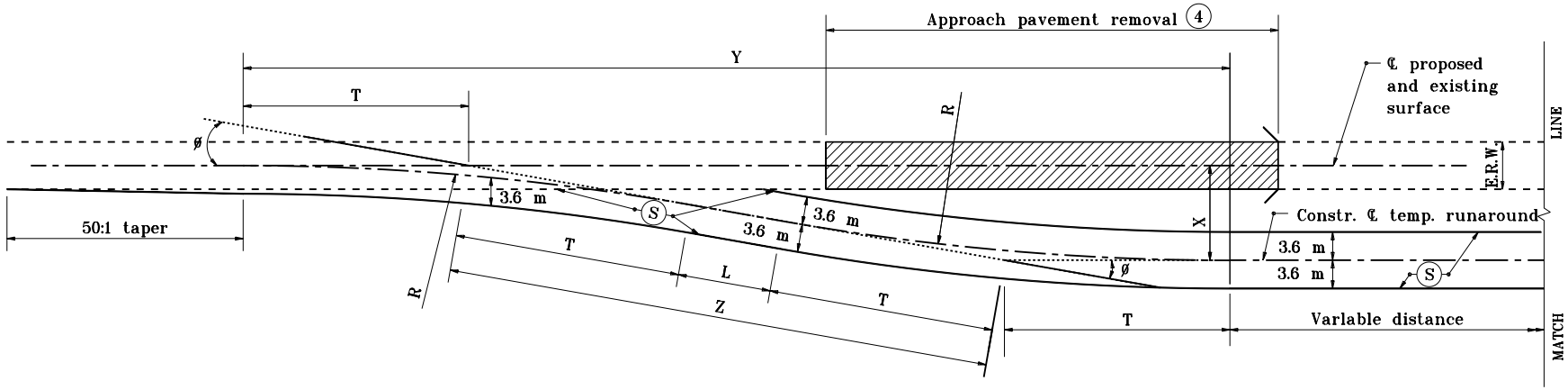

TEMPORARY RUNAROUND

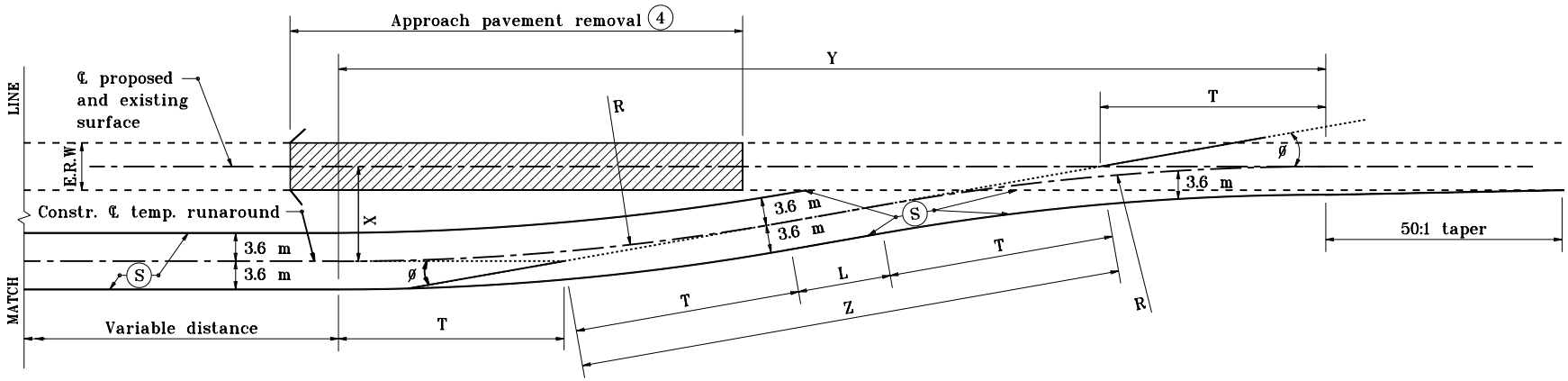

TEMPORARY RUNAROUND

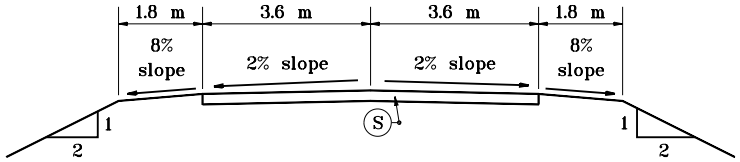

TYPICAL RUNAROUND SECTION

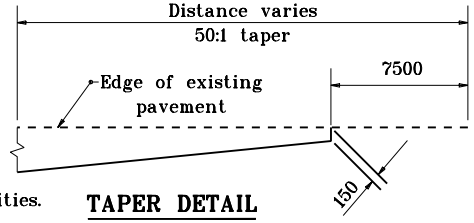

TAPER DETAIL

General Notes:

1. For notes that apply to this sheet, see Standard Drawing 713-TCTR-04.
2. See Standard Drawing 713-TCTR-02 for runaround geometrics and surface quantities.
3. See Standard Drawing 801-TCLG-01 for standard notes and legend.

All dimensions are in mm unless otherwise specified.

INDIANA DEPARTMENT OF TRANSPORTATION

TEMPORARY RUNAROUND GEOMETRICS

NOVEMBER 1995

STANDARD DRAWING NO. **713-TCTR-01**

ANTHONY L. UREMOVICH REGISTERED No. 18095 STATE OF INDIANA PROFESSIONAL ENGINEER

DESIGN STANDARDS ENGINEER

/s/ Anthony L. Uremovich 11-01-95
DESIGN STANDARDS ENGINEER DATE

/s/ Donald W. Lucas 11-01-95
CHIEF HIGHWAY ENGINEER DATE

Source Sheet: Det.1-D