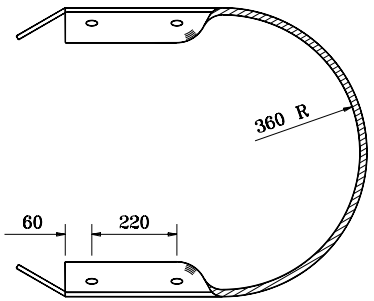

TOP VIEW

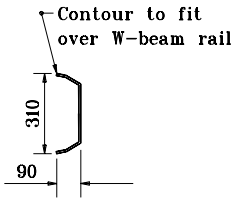

SECTION A-A

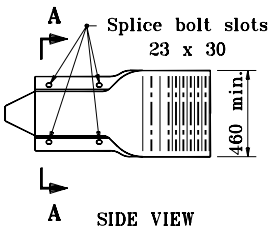

SIDE VIEW

W-BEAM END SECTION (BUFFER)

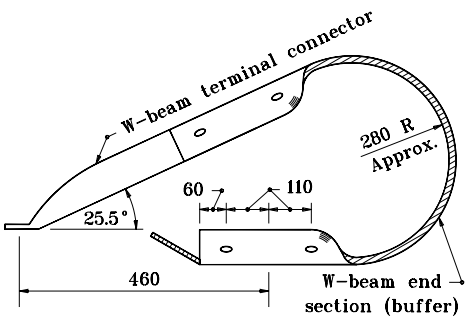

TOP VIEW

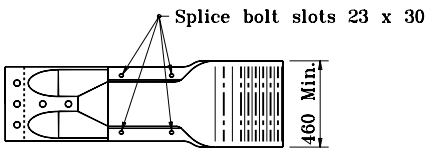

SIDE VIEW

TERMINAL END BUFFER

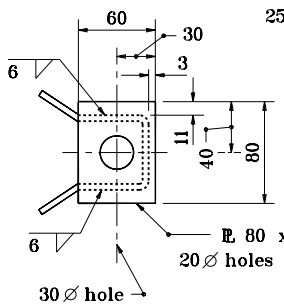

LEFT END VIEW

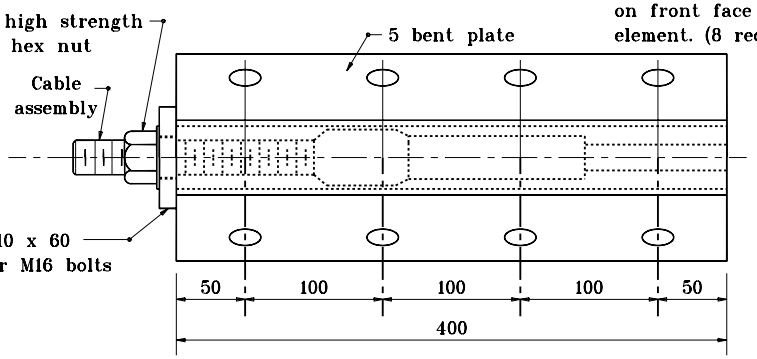

ANCHOR PLATE

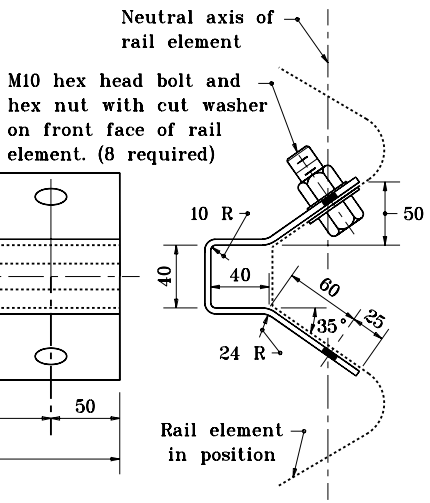

RIGHT END VIEW

GENERAL NOTES

1. This sheet shall be used in conjuction with Standard Drawings 601-CWGS-01, 02, 03, and 06.
2. The details on this sheet are for the standard components of the curved W-beam guardrail terminal systems.
3. An alternate single piece having similar dimensional shape to be Terminal End Buffer and mating with the W-beam guardrail may be used.
4. The W-beam terminal connector shall be steel of 3.5 thickness.
5. If the W-beam terminal connector is lapped on the outside of the guardrail, a galvanized 25 I.D. 50 O.D., 3.5 thick, narrow plain washer shall be placed under the splice bolt heads.
6. Attach the W-beam to the steel pipe with a 16 diameter x 32 length button head bolt with no washer. No connection to the post is required.
7. Nuts for the anchor cable assembly shall be hand tightened, plus one complete turn at the anchor plate end. All other nuts shall be torqured to 68 N m.

All dimensions are in mm unless otherwise specified.

INDIANA DEPARTMENT OF TRANSPORTATION

CURVED W-BEAM GUARDRAIL SYSTEM

APRIL 1996

STANDARD DRAWING NO. **601-CWGS-05**

ANTHONY L. UREMOVICH REGISTERED No. 18095 STATE OF INDIANA PROFESSIONAL ENGINEER

/s/ Anthony L. Uremovich 4-01-96
DESIGN STANDARDS ENGINEER DATE

/s/ Donald W. Lucas 4-01-96
CHIEF HIGHWAY ENGINEER DATE

DESIGN STANDARDS ENGINEER

Source Sheet: E-4A