NOTES:

1. The frame shall be wrapped with one continuous piece of geotextile fabric, and a 600 overlap shall be provided.

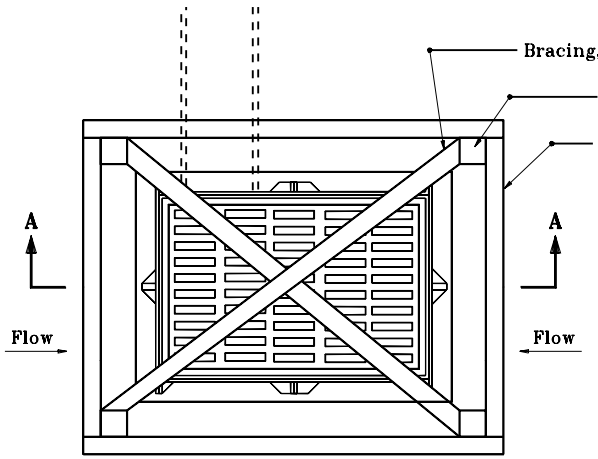

PLAN VIEW

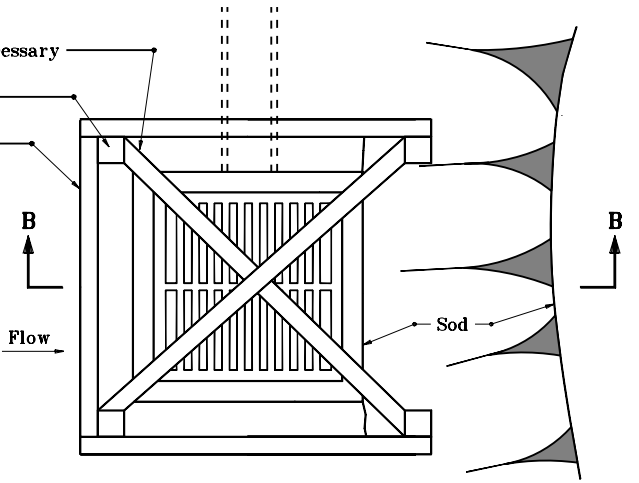

PLAN VIEW

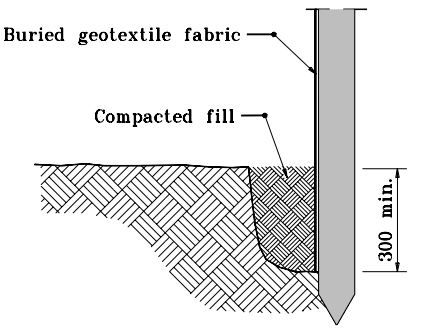

TRENCH DETAIL

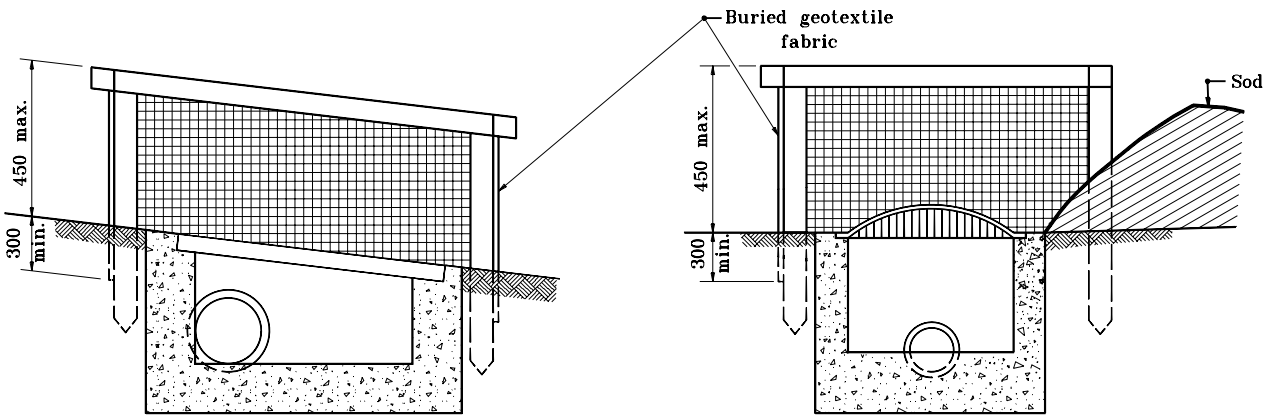

SECTION A–A

SECTION B–B

All dimensions are in mm unless otherwise specified.

INDIANA DEPARTMENT OF TRANSPORTATION

TEMPORARY DITCH INLET PROTECTION, GEOTEXTILE BOX

MARCH 2002

STANDARD DRAWING NO. **205–TECI–02**

RICHARD L. VanCLEAVE REGISTERED No. 9750 STATE OF INDIANA PROFESSIONAL ENGINEER

DESIGN STANDARDS ENGINEER

/s/ Richard L. VanCleave 3–01–02
DESIGN STANDARDS ENGINEER DATE

/s/ Richard K. Smutzer 3–01–02
CHIEF HIGHWAY ENGINEER DATE