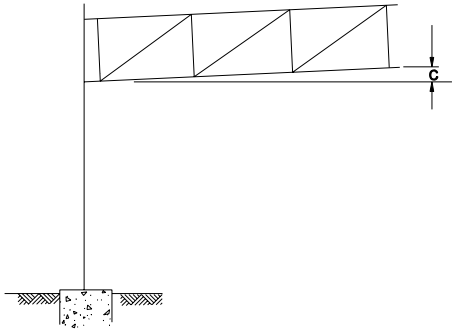

CAMBER FOR CANTILEVER

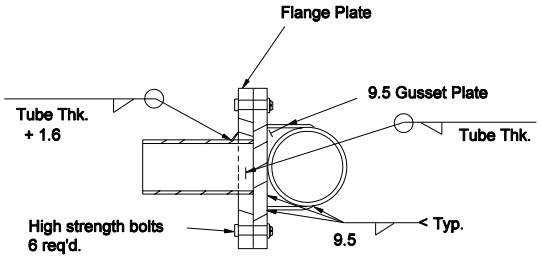

CANTILEVER ARM ATTACHMENT

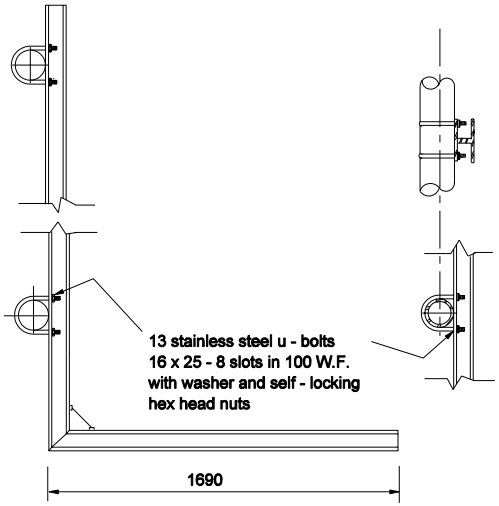

WALKWAY SUPPORT BRACKET

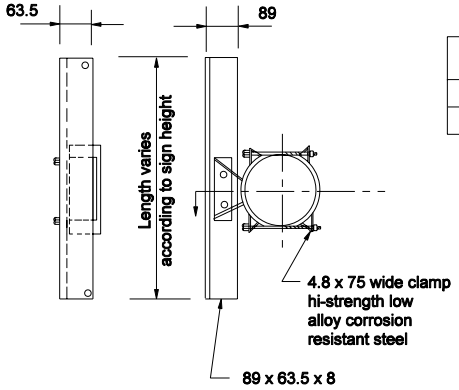

SINGLE MASTARM

SIGN BRACKET ASSEMBLY

ARM FLANGE PLATE TIGHTENING

POLE AND ARM PLATE BOLTS TENSION TABLE

BOLT SIZE	TENSION (KN)
M36	262
M48	467

All Dimension are in mm unless otherwise specfied

INDIANA DEPARTMENT OF TRANSPORTATION

OVERHEAD CANTILEVER
SIGN DETAILS

MARCH 2004

STANDARD DRAWING NO. 802-SNOC-02

RICHARD L. VanCLEAVE
REGISTERED
No. 9750
STATE OF
INDIANA
PROFESSIONAL ENGINEER

DESIGN STANDARDS ENGINEER

/s/ Richard L.VanCleave 3-01-04
DESIGN STANDARDS ENGINEER DATE

/s/ Richard K.Smutzer 3-01-04
CHIEF HIGHWAY ENGINEER DATE