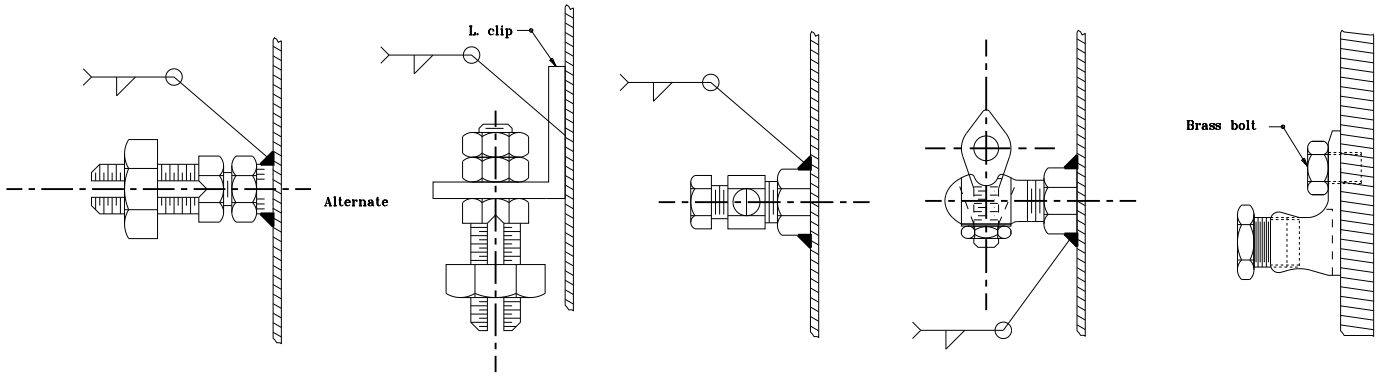

DETAIL A
ALTERNATIVE GROUNDING POSTS

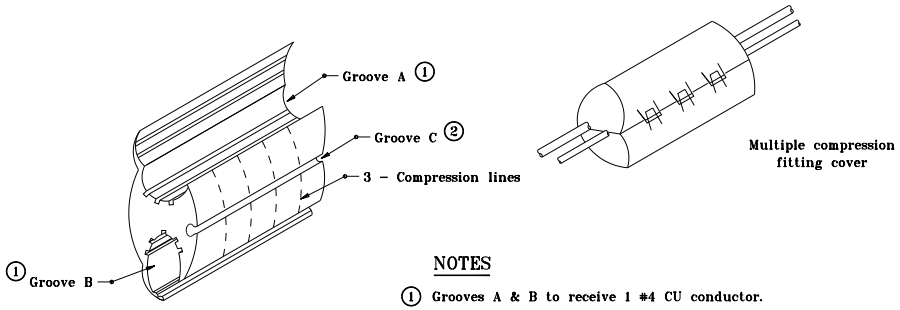

NOTES

① Grooves A & B to receive 1 #4 CU conductor.

② Groove C to receive 1 #10 CU conductor.

DETAIL B
MULTIPLE COMPRESSION FITTING

LEGEND

- Grounding post
- Self insulated splicer (insulating link)
- Unfused connector
- Fused connector
- Compression connector

All dimensions are in mm unless otherwise specified.

INDIANA DEPARTMENT OF TRANSPORTATION

LIGHTING WIRING DETAILS

JANUARY 1996

STANDARD DRAWING NO. **807-LTWR-02**

ANTHONY L. UREMOVICH REGISTERED No. 18095 STATE OF INDIANA PROFESSIONAL ENGINEER

DESIGN STANDARDS ENGINEER

/s/ Anthony L. Uremovich 1-02-96
DESIGN STANDARDS ENGINEER DATE

/s/ Donald W. Lucas 1-02-96
CHIEF HIGHWAY ENGINEER DATE

Source Sheet: MT 6A