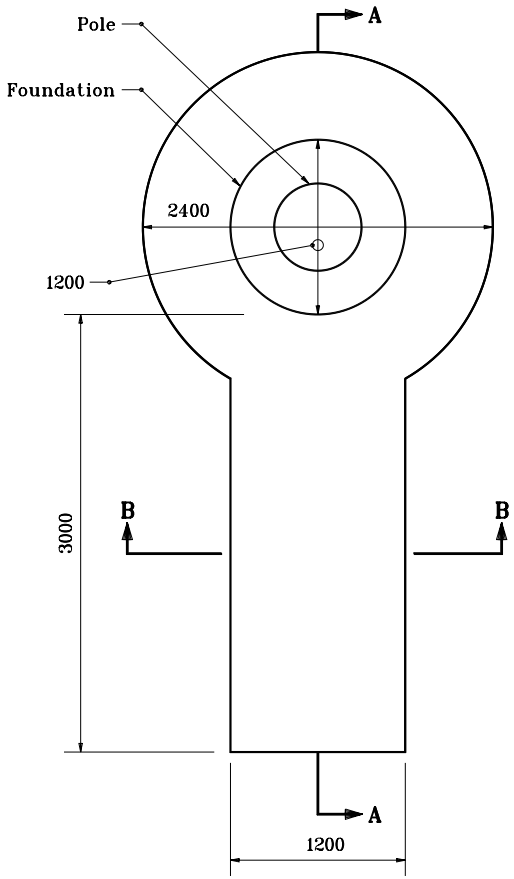

EXTERNAL WINCH CONCRETE PAD
WITHOUT RETAINING WALL

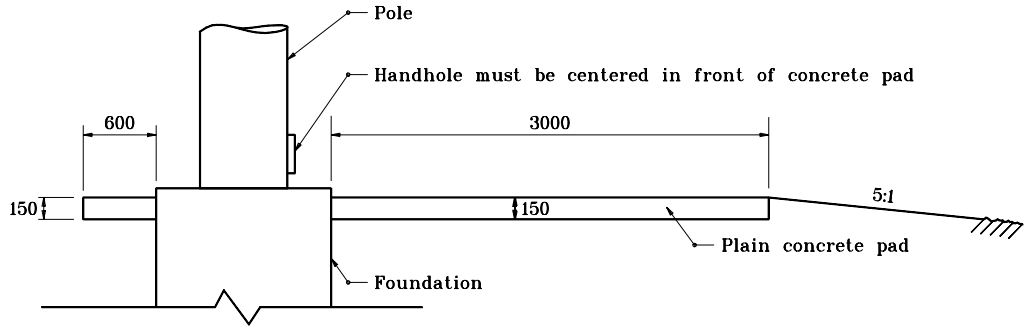

SECTION A–A

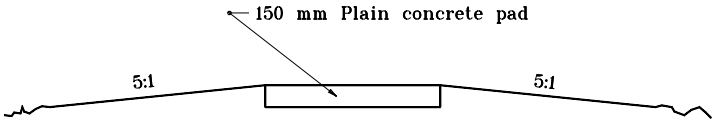

SECTION B–B

All dimensions are in mm unless otherwise specified.

INDIANA DEPARTMENT OF TRANSPORTATION

HIGH MAST TOWER CONCRETE PAD

MARCH 1995

STANDARD DRAWING NO. **807–LTHM–03**

ANTHONY L. UREMOVICH REGISTERED No. 18095 STATE OF INDIANA PROFESSIONAL ENGINEER

DESIGN STANDARDS ENGINEER

/s/ Anthony L. Uremovich 3–01–95
DESIGN STANDARDS ENGINEER DATE

/s/ Donald W. Lucas 3–01–95
CHIEF HIGHWAY ENGINEER DATE

Source Sheet: NONE