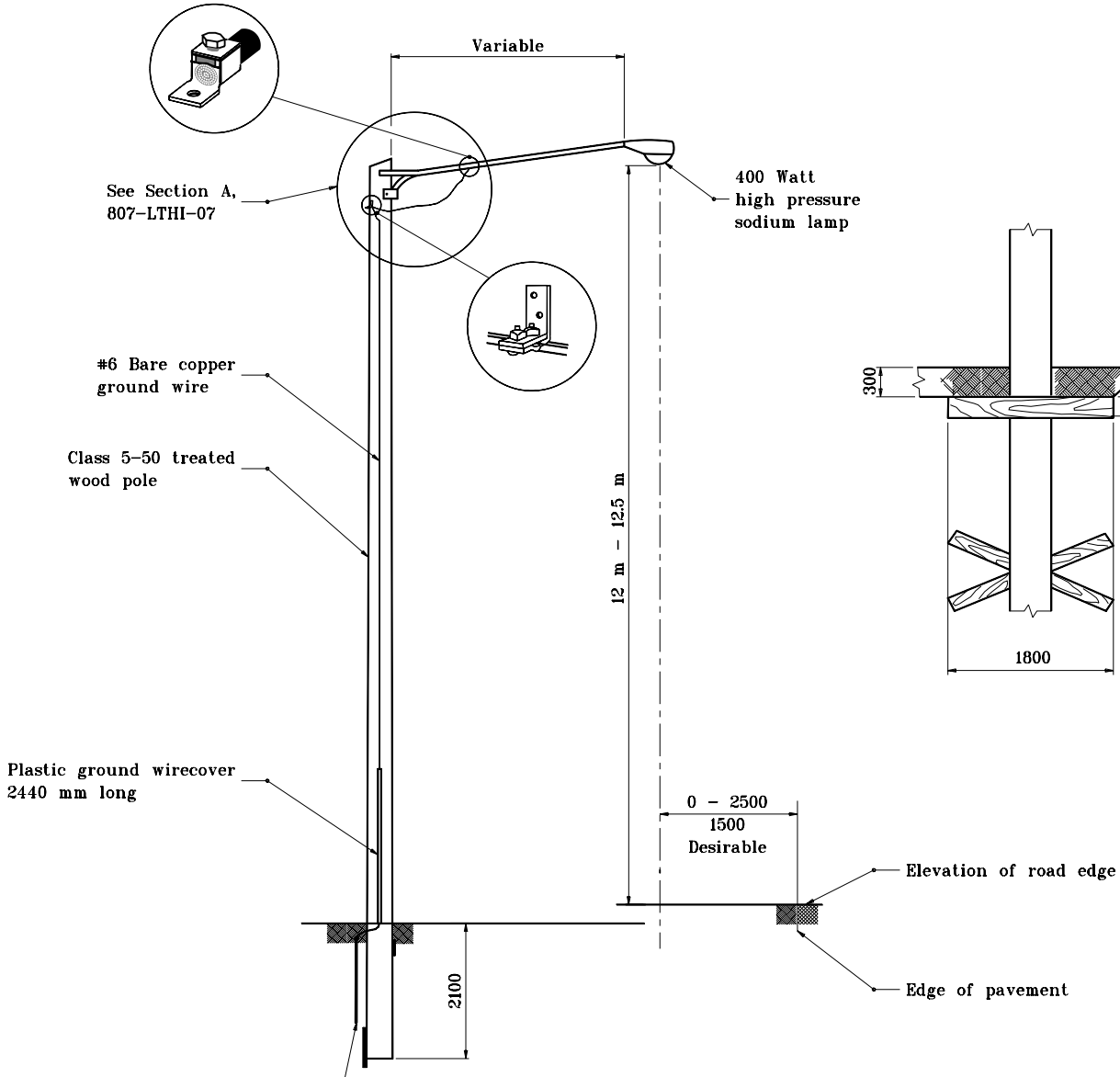

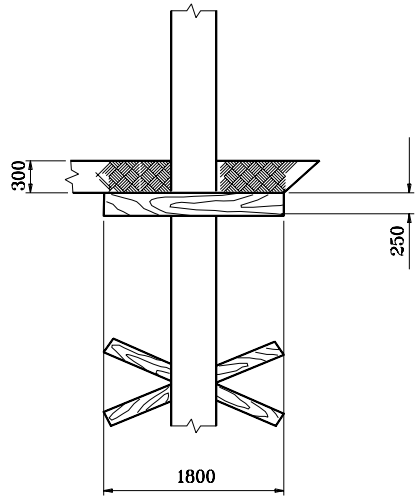

GENERAL NOTES

1. Install 50 x 250 x 1800 treated plank 300 below ground surface with inner face directly against pole outer face to be face against undisturbed earth as near as practicable.
2. Pole key anchor and plank stabilizer to be installed at each major change of overhead line direction and at each end of lighting distribution.
3. See Section on Standard Drawing 807-LTHI-07.

All dimensions are in mm unless otherwise specified.

INDIANA DEPARTMENT OF TRANSPORTATION

TEMPORARY HIGHWAY ILLUMINATION DETAILS

JANUARY 2000

STANDARD DRAWING NO. **807-LTHI-06**

ANTHONY L. UREMOVICH REGISTERED No. 18095 STATE OF INDIANA PROFESSIONAL ENGINEER

DESIGN STANDARDS ENGINEER

/s/ Anthony L. Uremovich 1-03-00
DESIGN STANDARDS ENGINEER DATE

/s/ Firooz Zandi 1-03-00
CHIEF HIGHWAY ENGINEER DATE