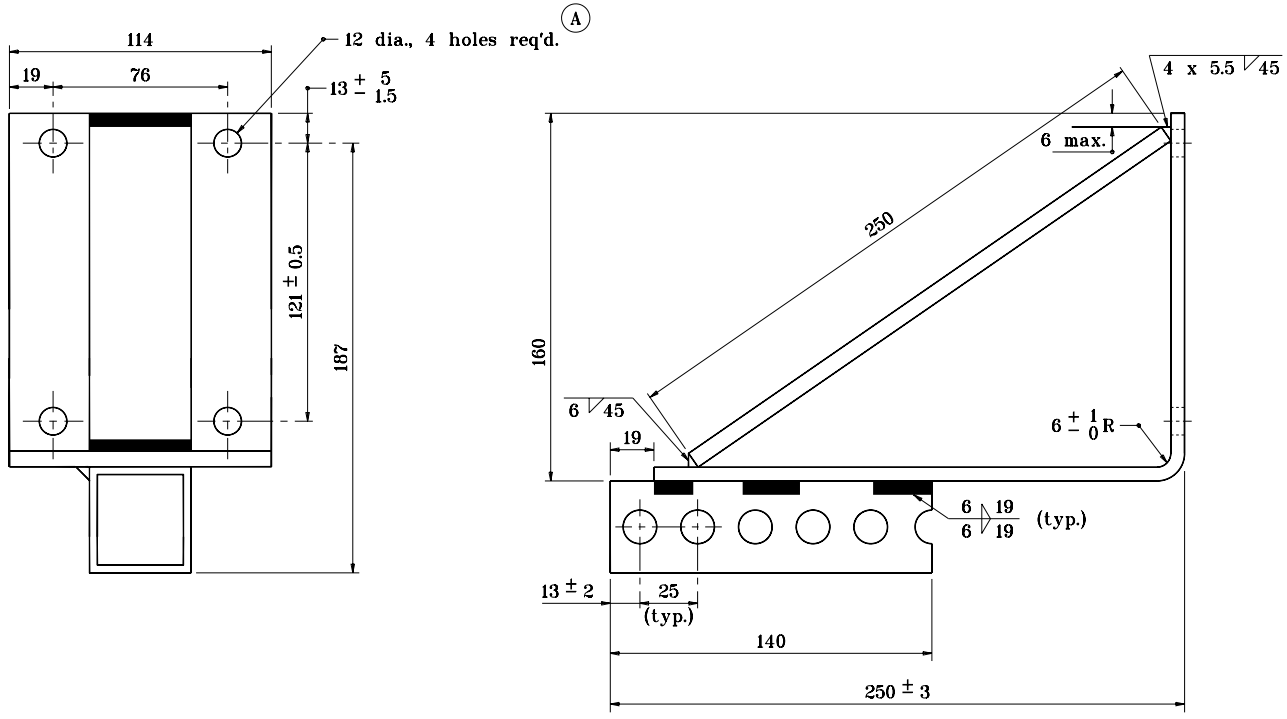

(A) Tolerances: 0 ± 8 angles, ± 13 unless noted

All dimensions are in mm unless otherwise specified.

INDIANA DEPARTMENT OF TRANSPORTATION

HIGHWAY ILLUMINATION TOWER DETAILS – BOTTOM LATCH

JANUARY 1999

STANDARD DRAWING NO. **807-LTHI-03B**

ANTHONY L. UREMOVICH REGISTERED No. 18095 STATE OF INDIANA PROFESSIONAL ENGINEER

DESIGN STANDARDS ENGINEER

/s/ Anthony L. Uremovich 1-04-99
DESIGN STANDARDS ENGINEER DATE

/s/ Donald W. Lucas 1-04-99
CHIEF HIGHWAY ENGINEER DATE

Source Sheet: NONE