GENERAL NOTES

1. Alternate handhole minimum size shall be 430 x 760 x 560 depth with 50 mm lid thickness.
2. Approximate weight for cast iron ring and cover shall be 145 kg.

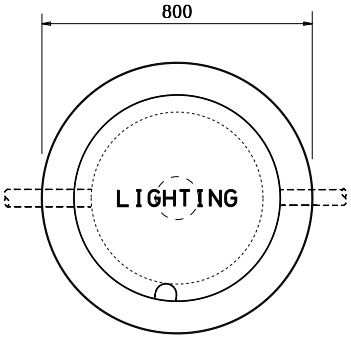

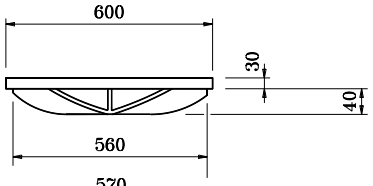

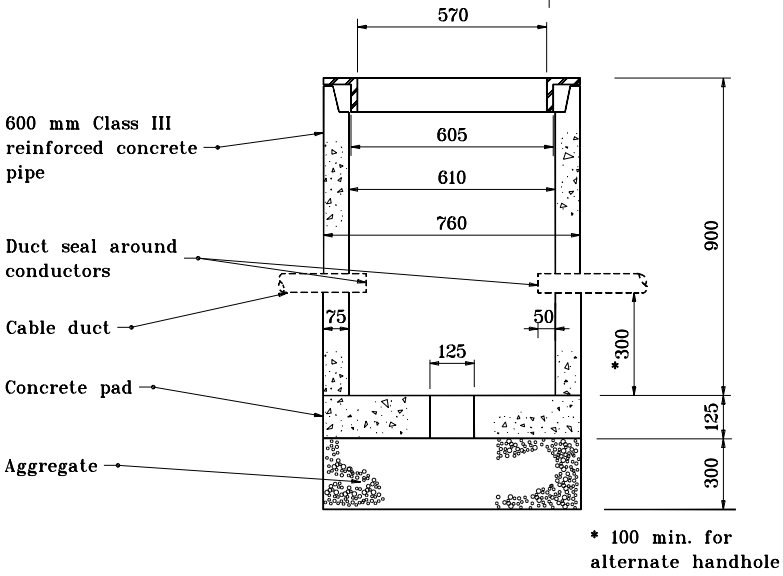

STREET & ALLEY TYPE HANDHOLE

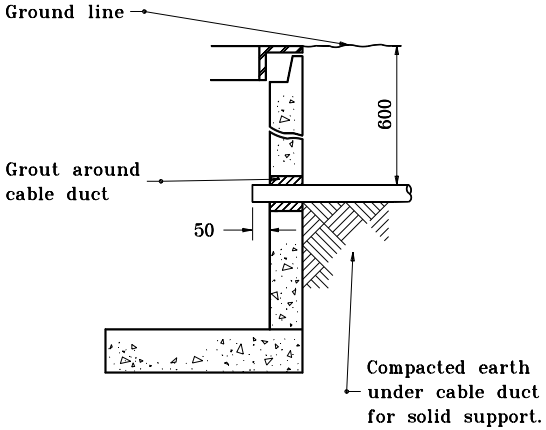

CABLE DUCT ENTERING HANDHOLE

All dimensions are in mm unless otherwise specified.

INDIANA DEPARTMENT OF TRANSPORTATION

LIGHT HANDHOLE DETAILS

MARCH 1995

STANDARD DRAWING NO. **807-LTHH-01**

ANTHONY L. UREMOVICH REGISTERED No. 18095 STATE OF INDIANA PROFESSIONAL ENGINEER

/s/ Anthony L. Uremovich 3-01-95
DESIGN STANDARDS ENGINEER DATE

/s/ Donald W. Lucas 3-01-95
CHIEF HIGHWAY ENGINEER DATE

DESIGN STANDARDS ENGINEER

Source Sheet: MT6F