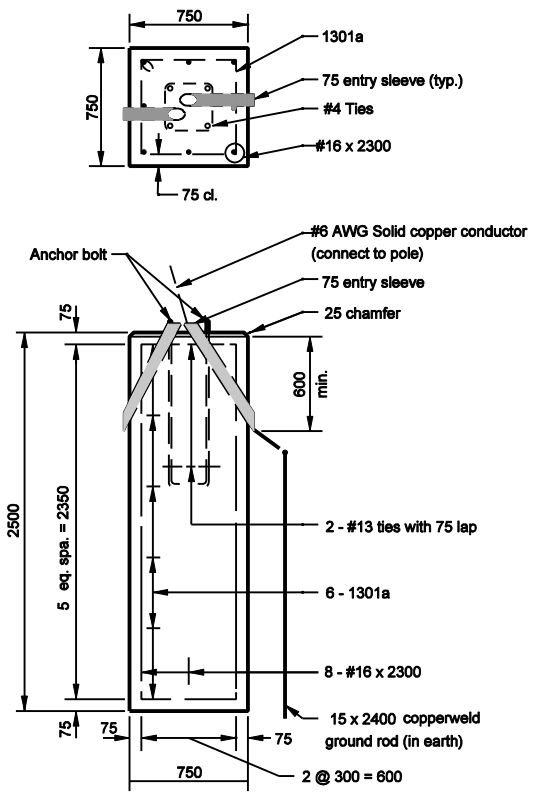

SQUARE FOUNDATION DETAIL

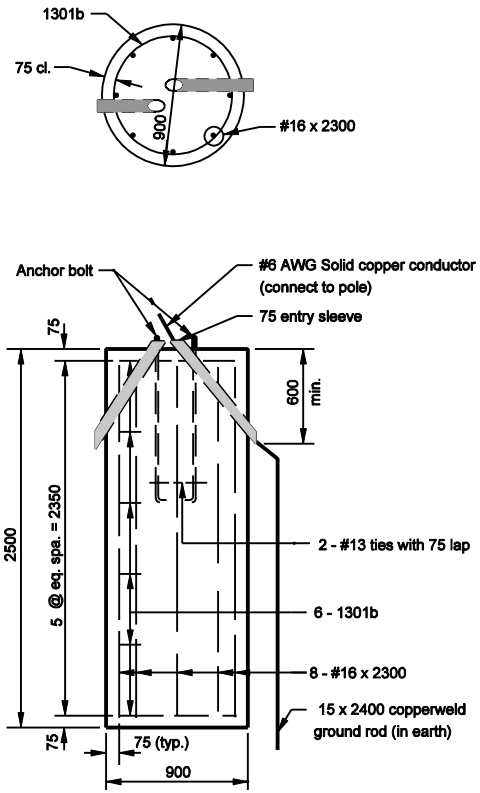

ROUND FOUNDATION DETAIL

GENERAL NOTES

① Top of lighting foundation shall be flush with foreslope at this point.

② Base of chamfer at top of lighting foundation shall be flush with foreslope at this point.

3. See Standard Drawing 801-LTFD-04A for plan views of pipe placement and sodding.

4. Low exposd end of pipe shall have drainage notch as shown on Standard Drawing 807-LTFD-04A.

5. Arrows shall be engraved on top of foundation to indicate direction of cable duct run.

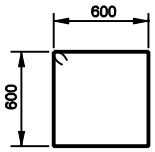

1301a x 2700

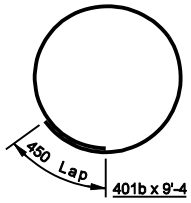

401b x 9'-4

All Dimension are in mm unless otherwise specfied

INDIANA DEPARTMENT OF TRANSPORTATION

LIGHT FOUNDATION

SEPTEMBER 2002

STANDARD DRAWING NO. 807-LTFD-05

RICHARD L. VANCLEAVE REGISTERED No. 9750 STATE OF INDIANA PROFESSIONAL ENGINEER

DESIGN STANDARDS ENGINEER

/s/ Richard L. VanCleave 9-03-02
DESIGN STANDARDS ENGINEER DATE

/s/ Richard K. Smulzer 9-03-02
CHIEF HIGHWAY ENGINEER DATE