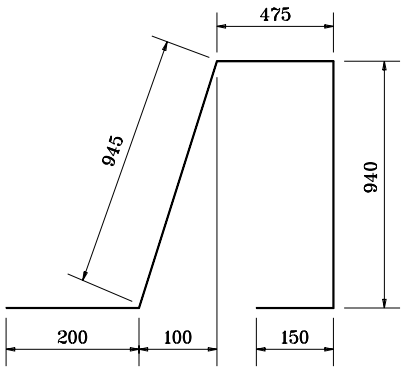

1903 x 2715

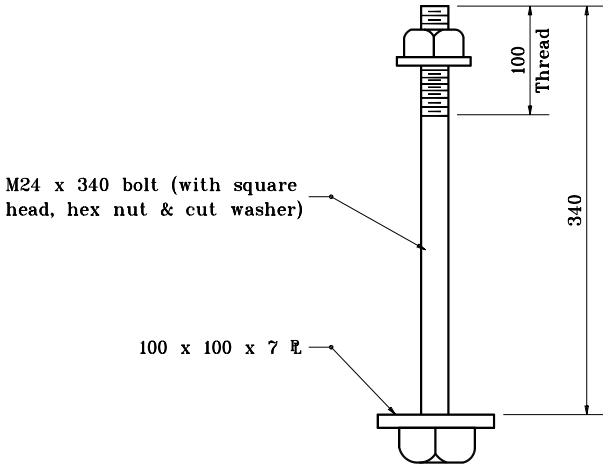

Galvanize thread, hex nut & cut washer.

ANCHOR BOLT AR-22

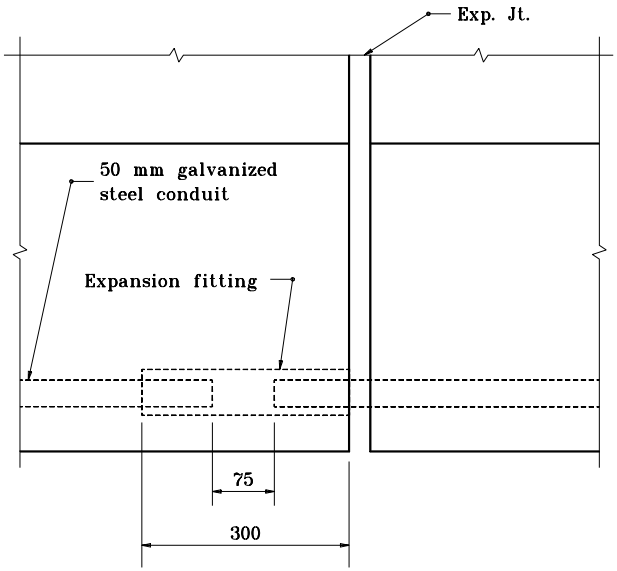

EXPANSION SLEEVE

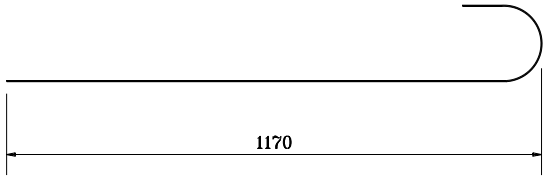

1902 x 1375

All dimensions are in mm unless otherwise specified.

INDIANA DEPARTMENT OF TRANSPORTATION

BRIDGE LIGHTING DETAILS

SEPTEMBER 1997

STANDARD DRAWING NO. **807-BLIT-03**

ANTHONY L. UREMOVICH REGISTERED No. 18095 STATE OF INDIANA PROFESSIONAL ENGINEER

/s/ Anthony L. Uremovich 9-01-97
DESIGN STANDARDS ENGINEER DATE

/s/ Donald W. Lucas 9-01-97
CHIEF HIGHWAY ENGINEER DATE

DESIGN STANDARDS ENGINEER

Source Sheet: R2-B