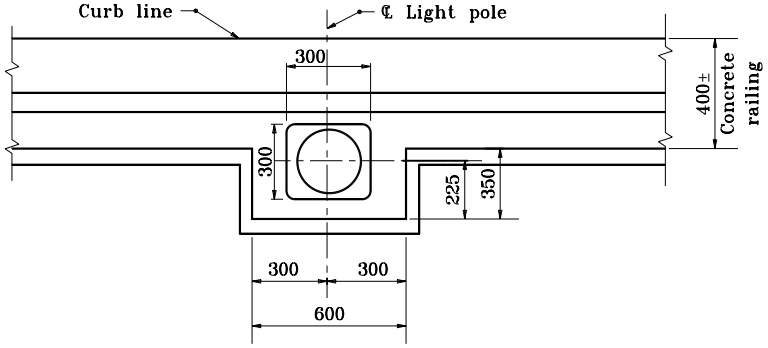

PLAN

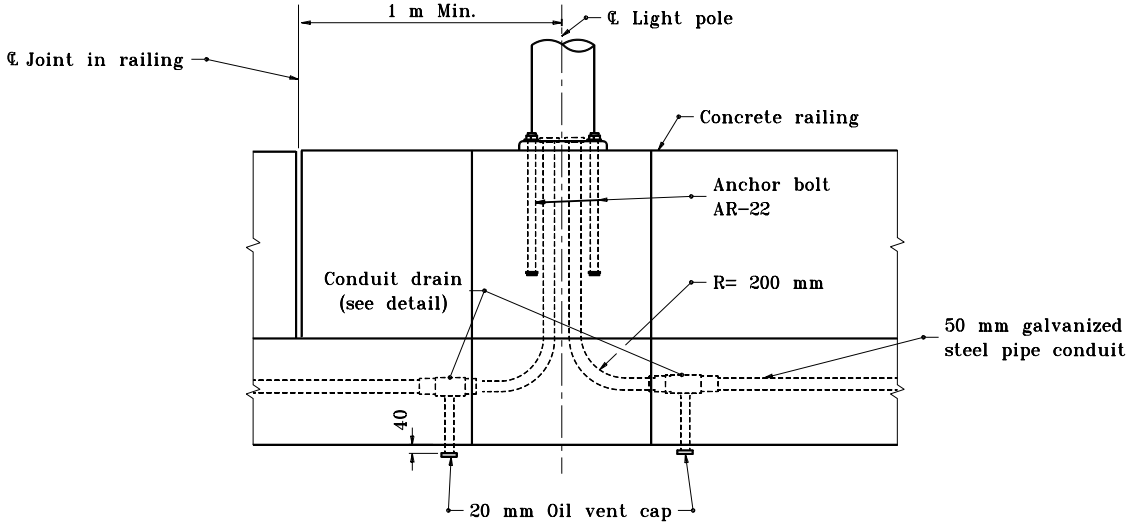

TYPICAL ELEVATION

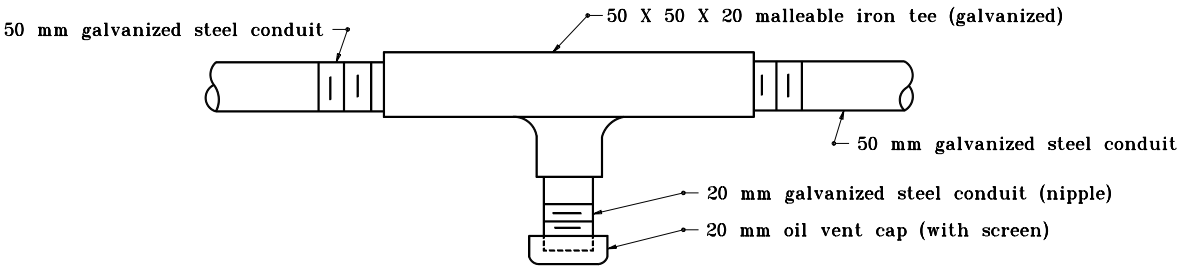

CONDUIT DRAIN DETAIL

All dimensions are in mm unless otherwise specified.

INDIANA DEPARTMENT OF TRANSPORTATION

BRIDGE LIGHTING DETAILS

SEPTEMBER 1994

STANDARD DRAWING NO. **807-BLIT-02**

ANTHONY L. UREMOVICH REGISTERED No. 18095 STATE OF INDIANA PROFESSIONAL ENGINEER

DESIGN STANDARDS ENGINEER

/s/ Anthony L. Uremovich 9-30-94
DESIGN STANDARDS ENGINEER DATE

/s/ Donald W. Lucas 9-30-94
CHIEF HIGHWAY ENGINEER DATE

Source Sheet: R2-B