GENERAL NOTES

(A) 13 preformed joint

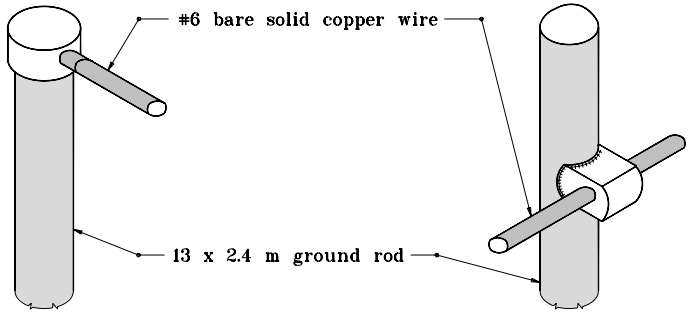

TOP CONNECTION

SIDE CONNECTION

THERMO WELD

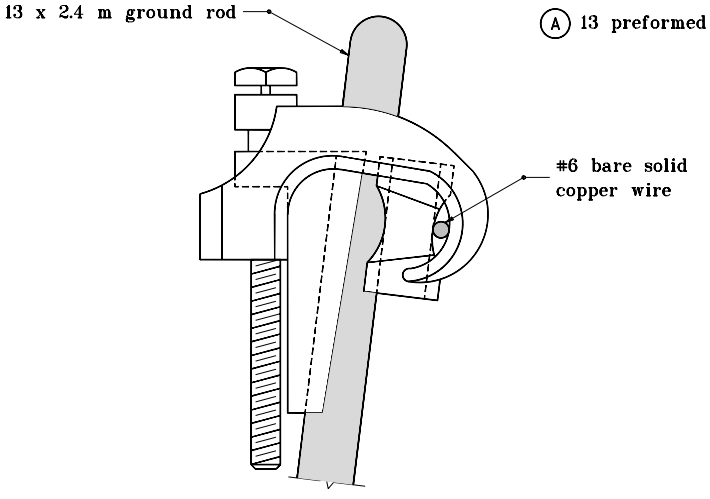

GROUNDING GRID

GROUND ROD CONNECTIONS

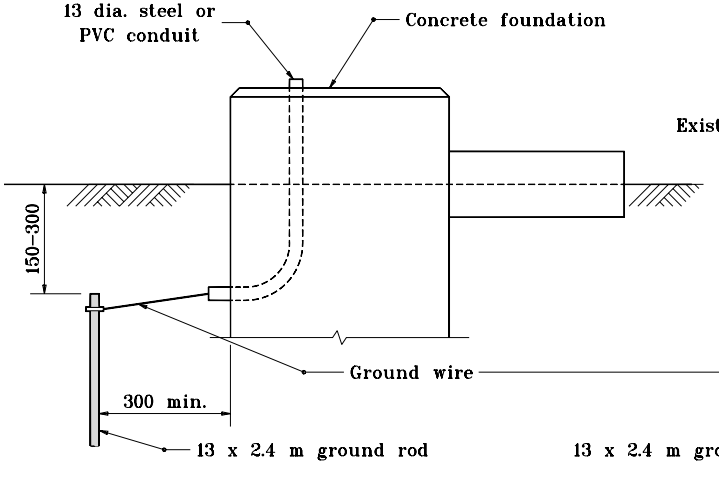

TYPICAL DETAIL
GROUND ROD IN EARTH

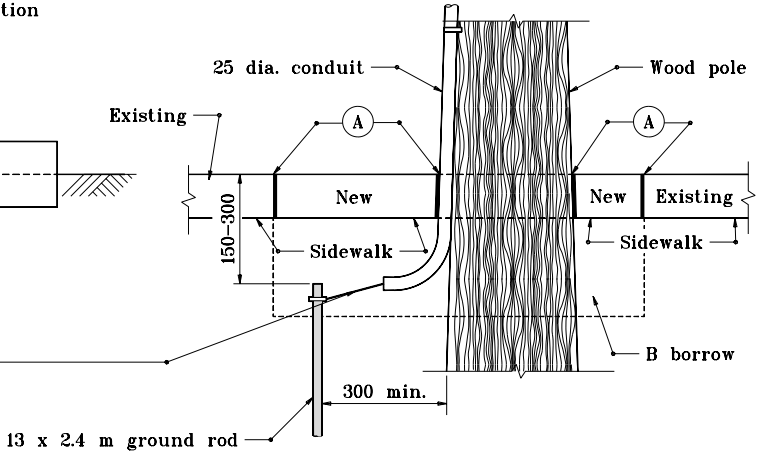

TYPICAL DETAIL
GROUND ROD IN SIDEWALK

All dimensions are in mm unless otherwise specified.

INDIANA DEPARTMENT OF TRANSPORTATION

GROUND ROD

SEPTEMBER 1998

STANDARD DRAWING NO. **805-SGGR-01**

ANTHONY L. UREMOVICH REGISTERED No. 18095 STATE OF INDIANA PROFESSIONAL ENGINEER

DESIGN STANDARDS ENGINEER

/s/ Anthony L. Uremovich 9-01-98
DESIGN STANDARDS ENGINEER DATE

/s/ Donald W. Lucas 9-01-98
CHIEF HIGHWAY ENGINEER DATE

Source Sheet: NONE