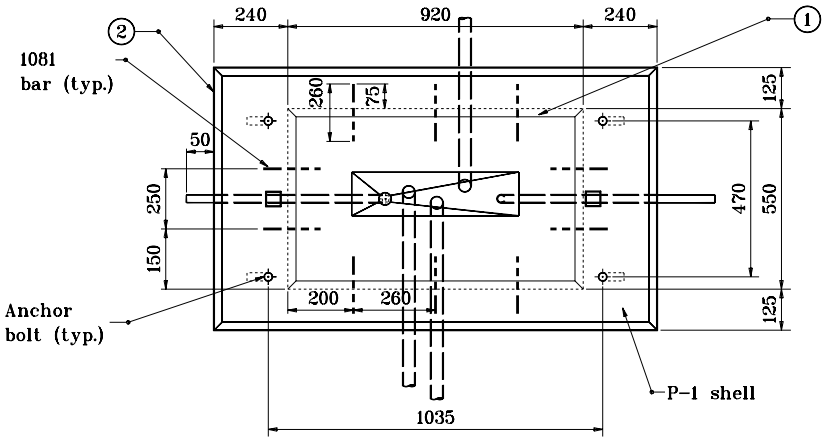

PLAN

NOTES:

1. See Standard Drawing 805-SGCF-02 for M foundation details.
2. See Standard Drawing 805-SGCF-01 for P-1 foundation details.
3. Existing anchor bolts shall be cut at or below top of existing foundation.
4. See Standard Drawing 805-SGCF-03 for General Notes.

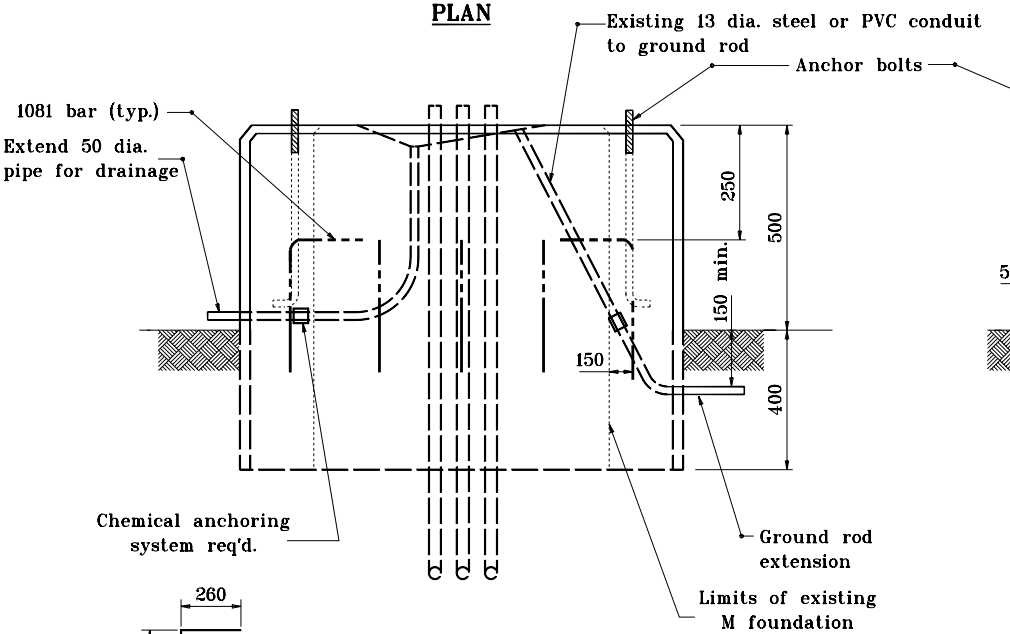

FRONT VIEW

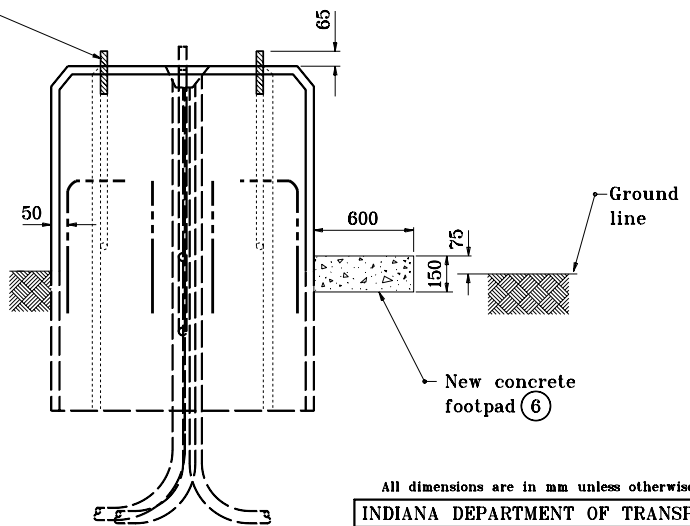

SIDE VIEW

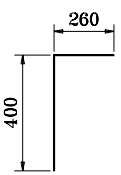

1081 x 660

All dimensions are in mm unless otherwise specified.

INDIANA DEPARTMENT OF TRANSPORTATION

EXISTING M FOUNDATION MODIFIED TO P-1 FOUNDATION

SEPTEMBER 1998

STANDARD DRAWING NO. **805-SGCF-05**

ANTHONY L. UREMOVICH REGISTERED No. 18095 STATE OF INDIANA PROFESSIONAL ENGINEER

/s/ Anthony L. Uremovich 9-01-98
DESIGN STANDARDS ENGINEER DATE

/s/ Donald W. Lucas 9-01-98
CHIEF HIGHWAY ENGINEER DATE

Source Sheet: MT7A

DESIGN STANDARDS ENGINEER