GENERAL NOTE

1. See Standard Drawing 802-SNWW-08 for Detail A.
2. See Standard Drawing 802-SNWW-08 for Detail B.

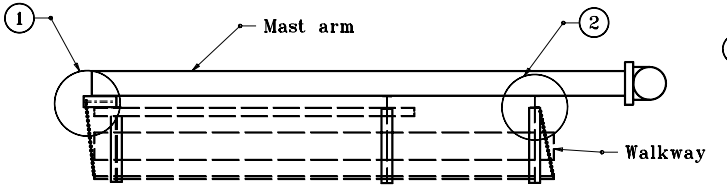

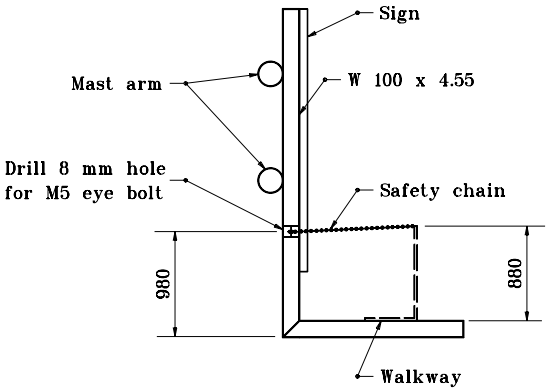

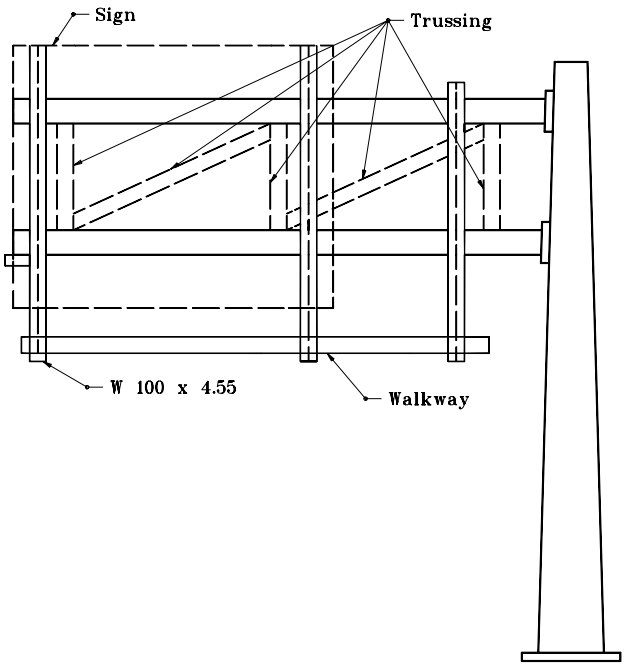

CHAIN SUPPORT FOR
DOUBLE MASTARM CANTILEVER
(BOX TRUSS SIMILIAR)

All dimensions are in mm unless otherwise specified.

INDIANA DEPARTMENT OF TRANSPORTATION

SIGN WALKWAY DETAILS

SEPTEMBER 2001

STANDARD DRAWING NO. **802-SNWW-07**

ANTHONY L. UREMOVICH REGISTERED No. 18095 STATE OF INDIANA PROFESSIONAL ENGINEER

DESIGN STANDARDS ENGINEER

/s/ Anthony L. Uremovich 9-04-01
DESIGN STANDARDS ENGINEER DATE

/s/ Firooz Zandi 9-04-01
CHIEF HIGHWAY ENGINEER DATE