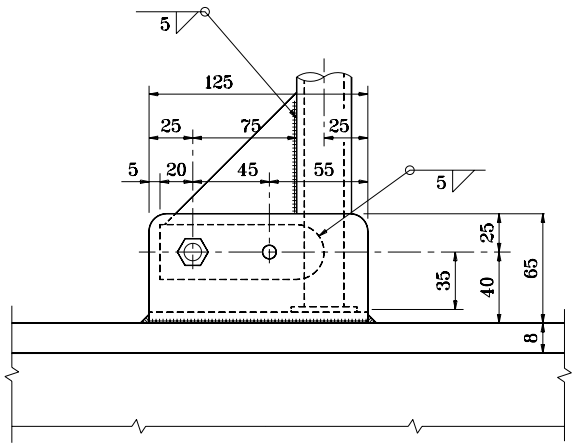

SIDE ELEVATION

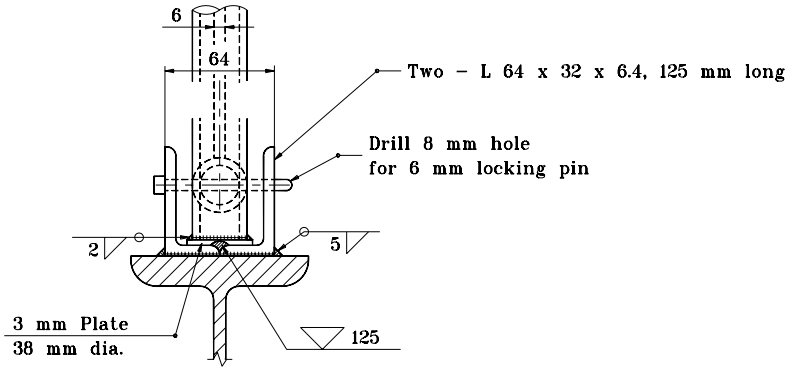

FRONT ELEVATION

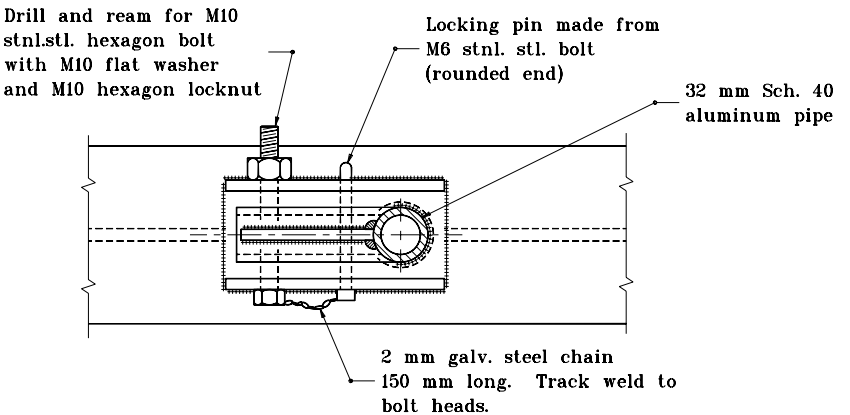

PLAN

DETAILS OF HANDRAIL HINGE

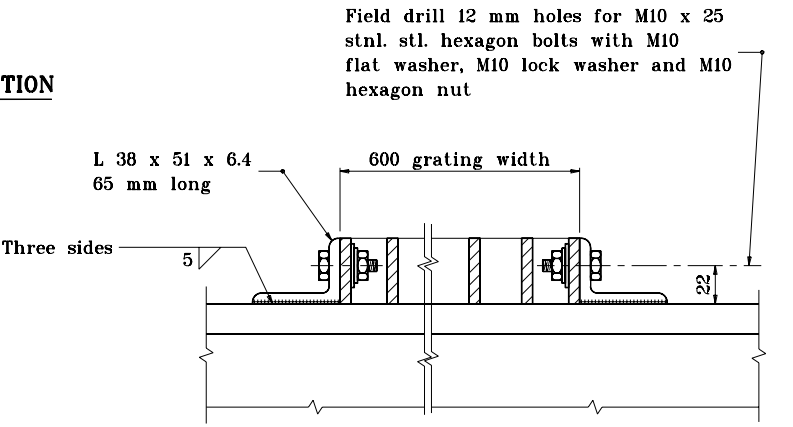

GRATING TIE DOWN
(Two req'd per walkway bracket)

All dimensions are in mm unless otherwise specified.

INDIANA DEPARTMENT OF TRANSPORTATION

SIGN WALKWAY HANDRAIL DETAILS

SEPTEMBER 2001

STANDARD DRAWING NO. **802-SNWW-05**

ANTHONY L. UREMOVICH REGISTERED No. 18095 STATE OF INDIANA PROFESSIONAL ENGINEER

DESIGN STANDARDS ENGINEER

/s/ Anthony L. Uremovich 9-04-01
DESIGN STANDARDS ENGINEER DATE

/s/ Firooz Zandi 9-04-01
CHIEF HIGHWAY ENGINEER DATE