GENERAL NOTES

1. Oxidation inhibitor shall be liberally applied to all surfaces that mate with a dissimilar material.
2. Grooves A & B to receive 1 #4 Cu. conductor.
3. Groove C to receive 1 #10 conductor.
4. Use of inhibiting compound is mandatory for all connections.
5. Multiple compression fitting shall be covered with snap-on fiber or plastic covers. Taping shall not be permitted.

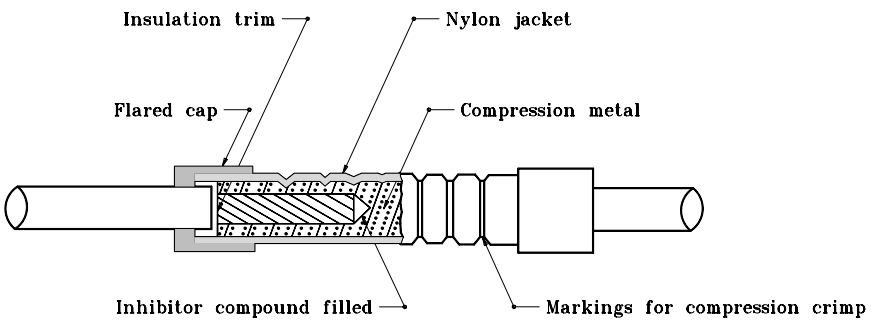

INSULATING LINK DETAIL

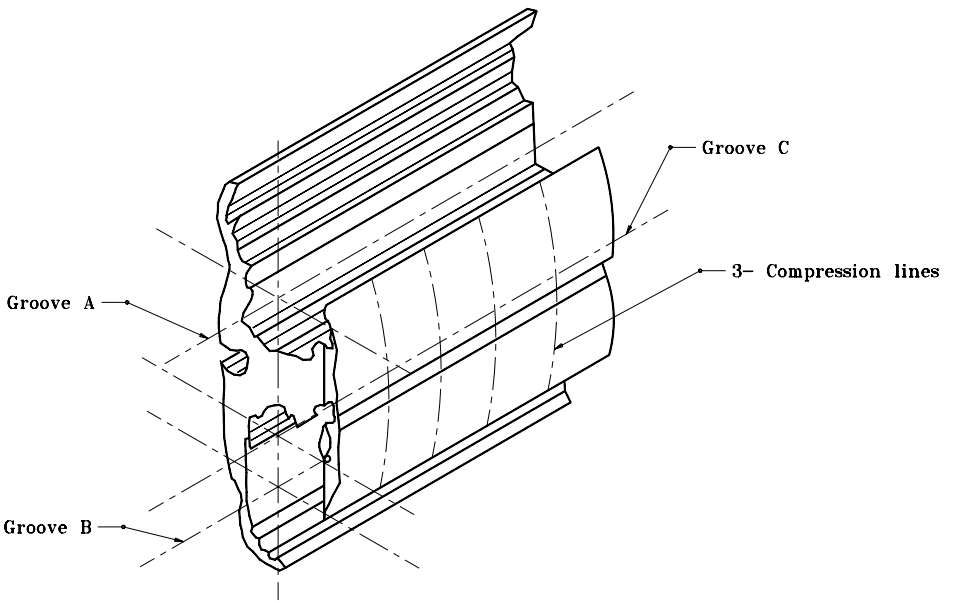

MULTIPLE COMPRESSION FITTING DETAIL

All dimensions are in mm unless otherwise specified.

INDIANA DEPARTMENT OF TRANSPORTATION

SIGN WIRING DETAILS

SEPTEMBER 2001

STANDARD DRAWING NO. **802-SNWR-04**

ANTHONY L. UREMOVICH REGISTERED No. 18095 STATE OF INDIANA PROFESSIONAL ENGINEER

DESIGN STANDARDS ENGINEER

/s/ Anthony L. Uremovich 9-04-01
DESIGN STANDARDS ENGINEER DATE

/s/ Firooz Zandi 9-04-01
CHIEF HIGHWAY ENGINEER DATE