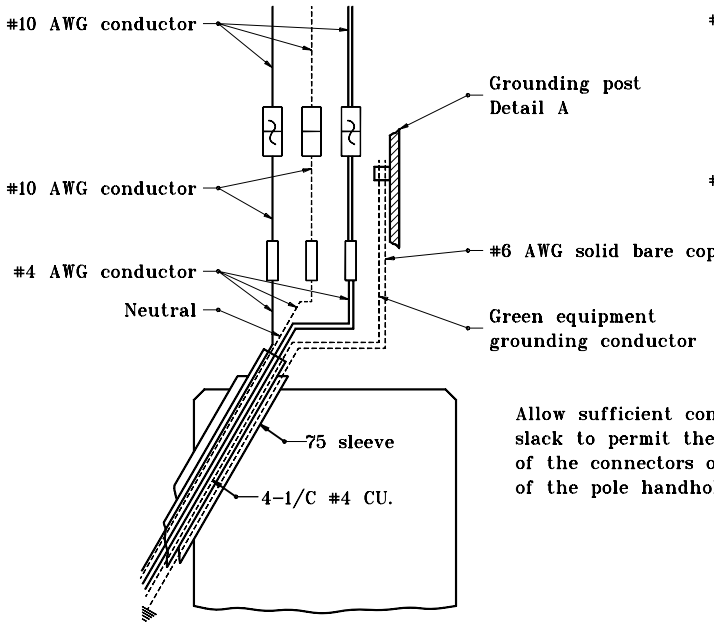

Allow sufficient conductor slack to permit the withdrawal of the connectors outside of the pole handhole.

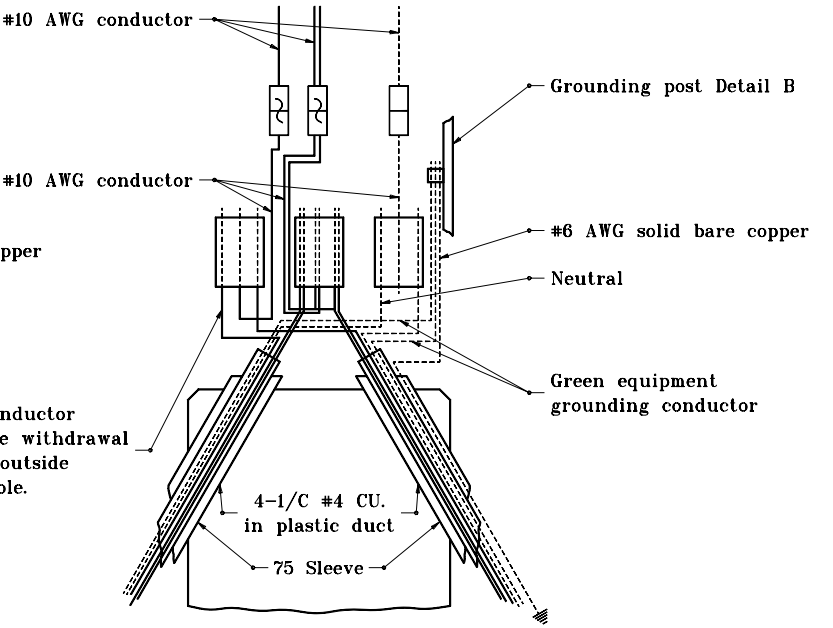

OVERHEAD SIGN SERVICE DETAIL
(UNDERGROUND CONNECTIONS)

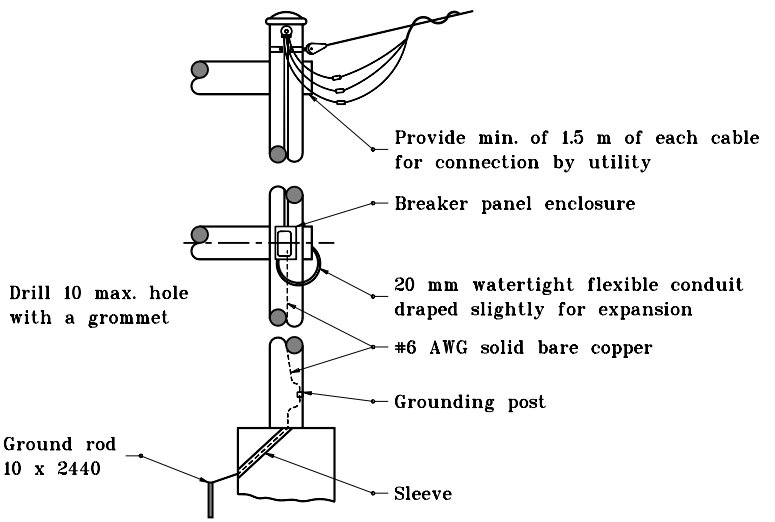

OVERHEAD SIGN SERVICE DETAIL
(AERIAL CONNECTION)

GENERAL NOTES

1. Breaker panel wiring to be used with bridge bracket sign illumination, or when lighting overhead sign is not part of a roadway lighting system.

2. Oxidation inhibitor shall be liberally applied to all surfaces that mate with a dissimilar material.

LEGEND

- Self insulated splicer (Insulating Link)
- Un-fused connector
- Fused connector
- Compression connector

All dimensions are in mm unless otherwise specified.

INDIANA DEPARTMENT OF TRANSPORTATION

SIGN WIRING DETAILS

SEPTEMBER 2001

STANDARD DRAWING NO. **802-SNWR-01**

ANTHONY L. UREMOVICH REGISTERED No. 18095 STATE OF INDIANA PROFESSIONAL ENGINEER

DESIGN STANDARDS ENGINEER

/s/ Anthony L. Uremovich 9-04-01
DESIGN STANDARDS ENGINEER DATE

/s/ Firooz Zandi 9-04-01
CHIEF HIGHWAY ENGINEER DATE