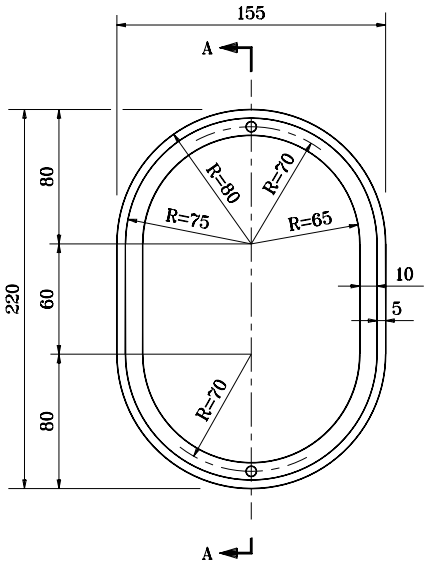

ELECTRICAL CONDULET

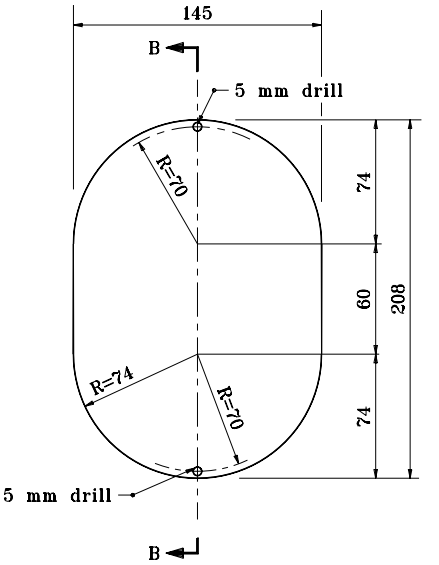

CONDULET COVER

GENERAL NOTES

1. Drill and tap (thru) two-3.3mm holes with M4 threads.
2. Two-Stainless Steel M4x12 long round-head phillips machine screws required.
3. Sand-Cast Aluminum Alloy.

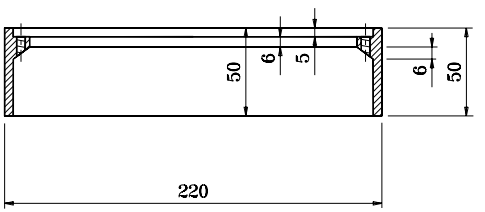

SECTION A-A

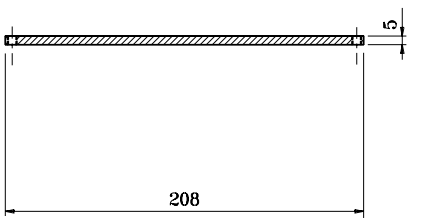

SECTION B-B

All dimensions are in mm unless otherwise specified.

INDIANA DEPARTMENT OF TRANSPORTATION

ALUMINUM STRUCTURE CONDULET DETAILS

SETEMBER 2001

STANDARD DRAWING NO. **802-SNOH-09**

ANTHONY L. UREMOVICH REGISTERED No. 18095 STATE OF INDIANA PROFESSIONAL ENGINEER

DESIGN STANDARDS ENGINEER

/s/ Anthony L. Uremovich 9-04-01
DESIGN STANDARDS ENGINEER DATE

/s/ Firooz Zandi 9-04-01
CHIEF HIGHWAY ENGINEER DATE