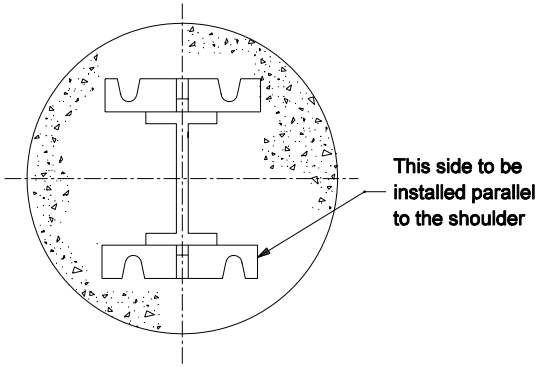

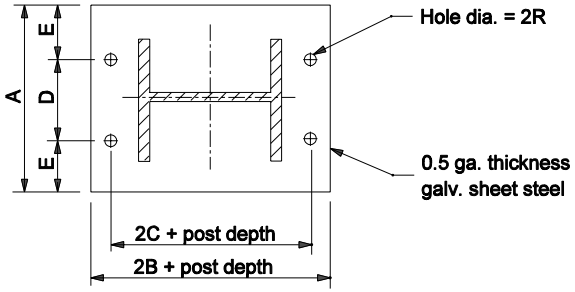

KEEPER PLATE

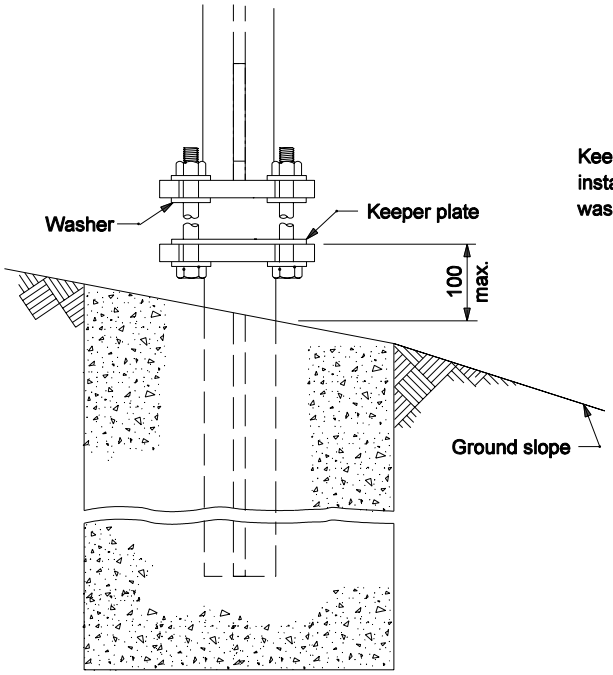

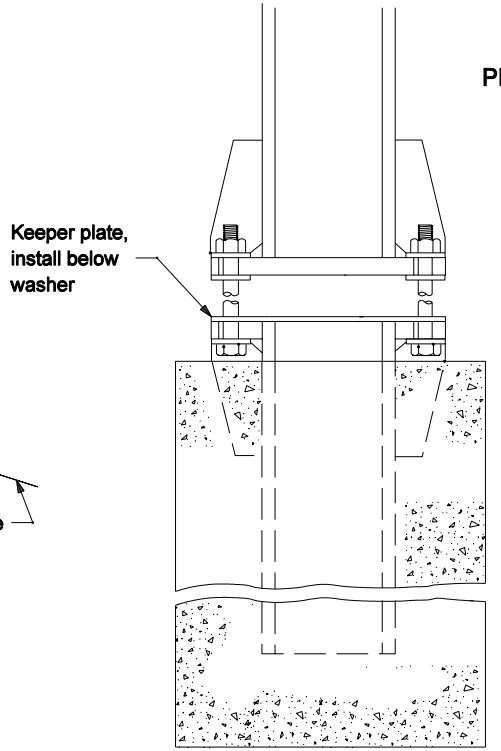

PROCEDURE FOR ASSEMBLY OF BASE CONNECTION:

Assemble post to stub with bolts. One flat washer on each bolt shall be placed between the top of the keeper plate and bottom of the top base plate. Shim as required to plumb post.

Tighten all bolts the maximum possible with 300 mm to 400 mm wrench to bed washers and shims and to clean bolt threads, then loosen each bolt in turn and retighten bolts in a systematic order to the prescribed torque. See table on Standard Drawing 802-SNGP-05 for dimensions.

Burr threads at junction with nuts using a center punch to prevent nut loosening.

Stubs shall be plumb and base plate shall be leveled and physically held level until the concrete sets.

All Dimension are in mm unless otherwise specfied

INDIANA DEPARTMENT OF TRANSPORTATION

WIDE FLANGE SIGN SUPPORT BASE

March 2004

STANDARD DRAWING NO. 802-SNGP-02

RICHARD L. VanCLEAVE REGISTERED No. 9750 STATE OF INDIANA PROFESSIONAL ENGINEER

DESIGN STANDARDS ENGINEER

/s/ Richard L. VanCleave 3-01-04
DESIGN STANDARDS ENGINEER DATE

/s/ Richard K. Smutzer 3-01-04
CHIEF HIGHWAY ENGINEER DATE