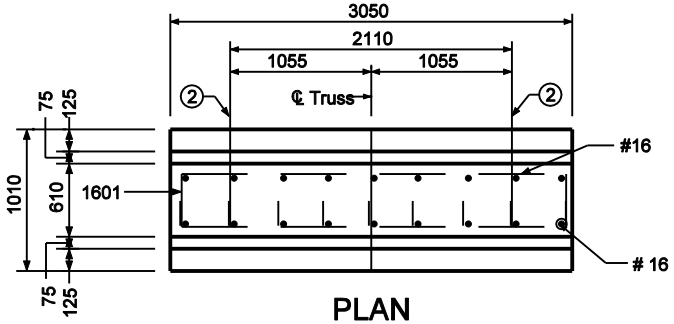

PLAN

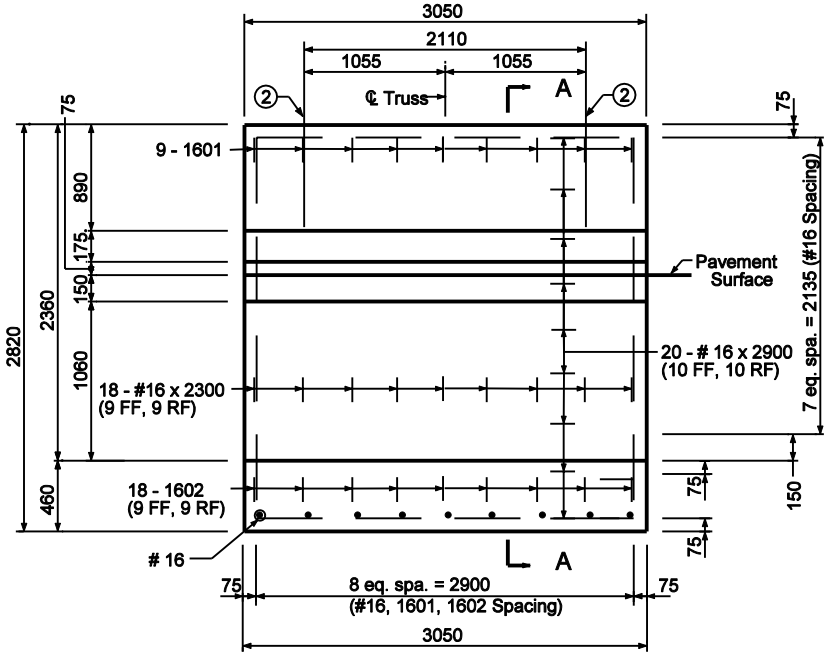

ELEVATION

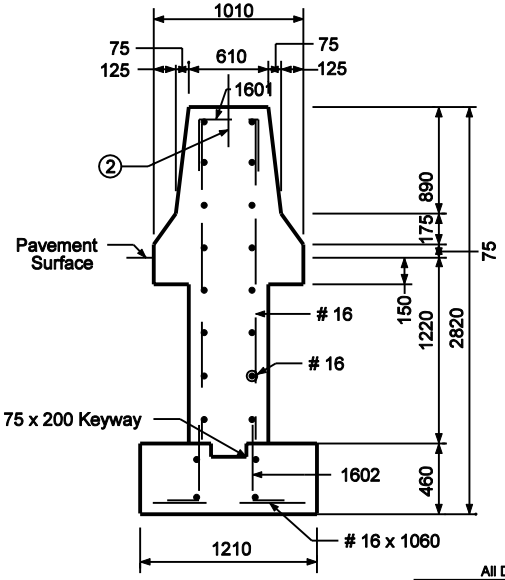

SECTION A-A

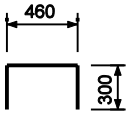

1601 x 1060

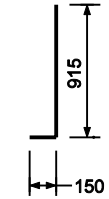

1602 x 1060

Notes:

1. For barrier wall width transition see Standard Drawing 602-CCMB-03.

② ℄ Anchor Bolt.

All Dimension are in mm unless otherwise specfied

INDIANA DEPARTMENT OF TRANSPORTATION

BOX TRUSS SIGN FOUNDATION FOR 1145 CONC. BARRIER WALL TYPE V - B

MARCH 2003

STANDARD DRAWING NO. 802-SNBF-04

RICHARD L. VanCLEAVE REGISTERED No. 9750 STATE OF INDIANA PROFESSIONAL ENGINEER

DESIGN STANDARDS ENGINEER

/s/ Richard L. VanCleave 3-03-03
DESIGN STANDARDS ENGINEER DATE

/s/ Richard K. Smutzer 3-03-03
CHIEF HIGHWAY ENGINEER DATE