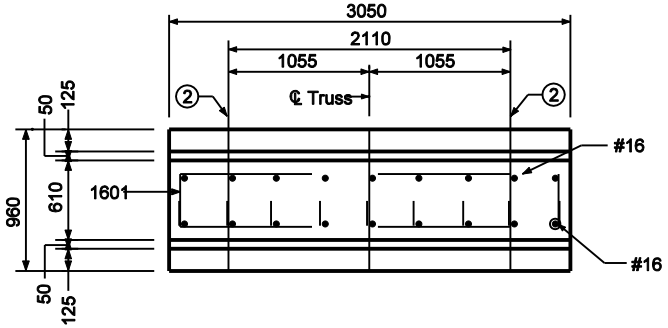


PLAN

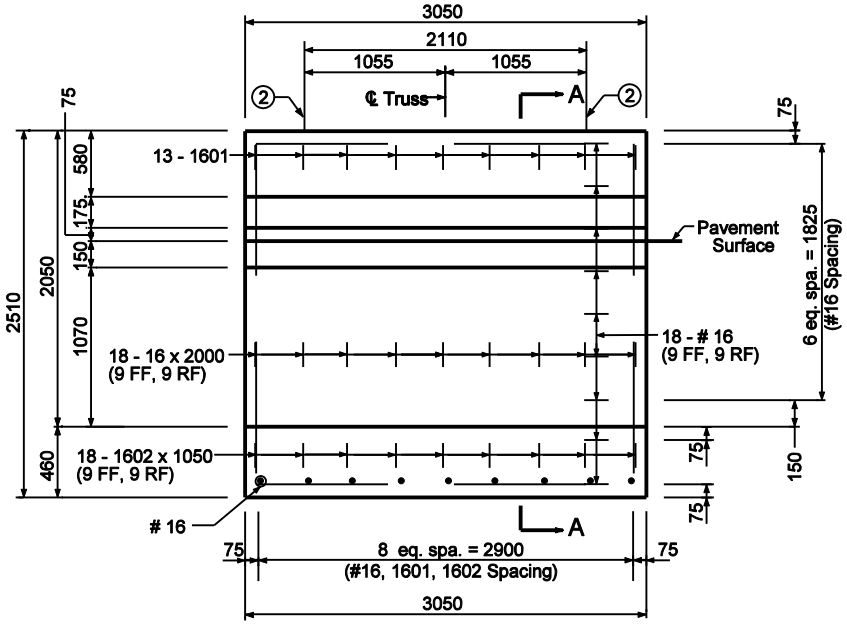


ELEVATION

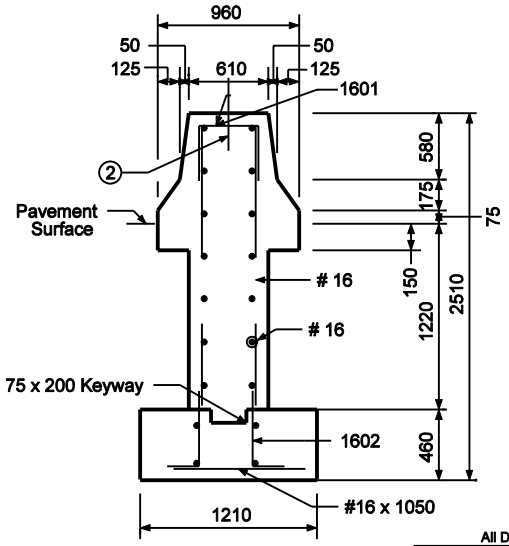


SECTION A-A

## Notes:

1. For barrier wall width transition see Standard Drawing 602-CCMB-03.

② ℄ Anchor Bolt.

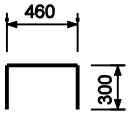


1601 x 1060

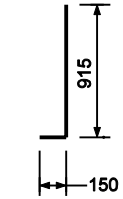


1602 x1060

All Dimension are in mm unless otherwise specfied

INDIANA DEPARTMENT OF TRANSPORTATION

**BOX TRUSS SIGN FOUNDATION FOR 840 CONC. BARRIER WALL TYPE V - A**

MARCH 2003

STANDARD DRAWING NO. 802-SNBF-03

RICHARD L. VanCLEAVE REGISTERED No. 9750 STATE OF INDIANA PROFESSIONAL ENGINEER

DESIGN STANDARDS ENGINEER

/s/ Richard L. VanCleave 3-03-03
DESIGN STANDARDS ENGINEER DATE

/s/ Richard K. Smutzer 3-03-03
CHIEF HIGHWAY ENGINEER DATE