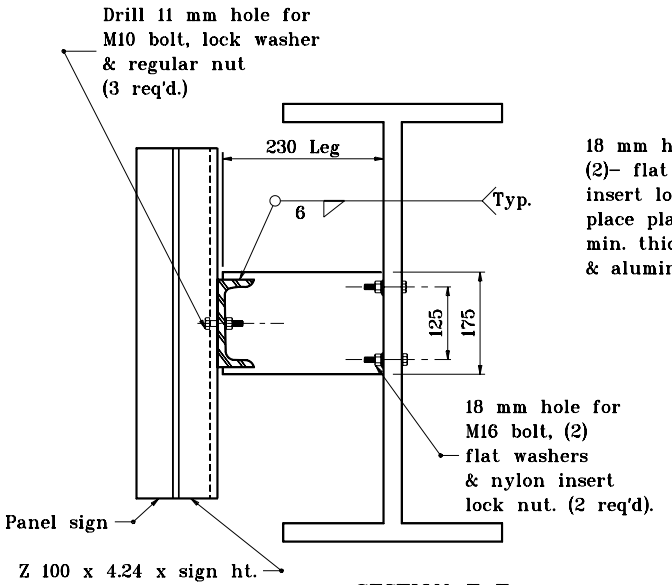


SECTION E–E

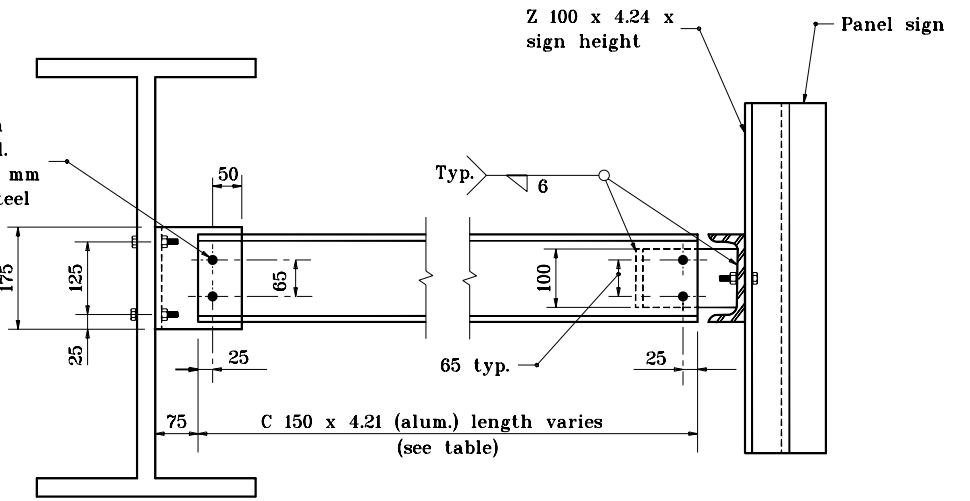


SECTION F–F

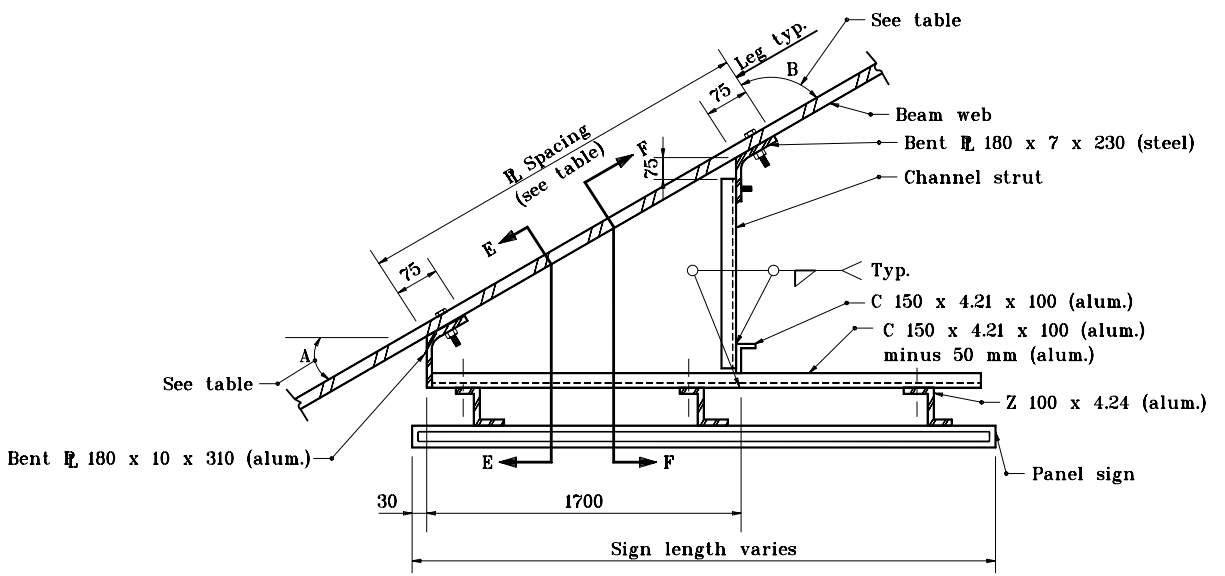


PLAN (TYPE B)

10°, 20°, 30°, & 40° Connections

All dimensions are in mm unless otherwise specified.

INDIANA DEPARTMENT OF TRANSPORTATION

# BRIDGE BRACKET ASSY. FOR CROSSROAD SIGNING

SEPTEMBER 2001

STANDARD DRAWING NO. **802–SNBB–04**

ANTHONY L. UREMOVICH REGISTERED No. 18095 STATE OF INDIANA PROFESSIONAL ENGINEER

DESIGN STANDARDS ENGINEER

/s/ Anthony L. Uremovich 9–04–01
DESIGN STANDARDS ENGINEER DATE

/s/ Firooz Zandi 9–04–01
CHIEF HIGHWAY ENGINEER DATE