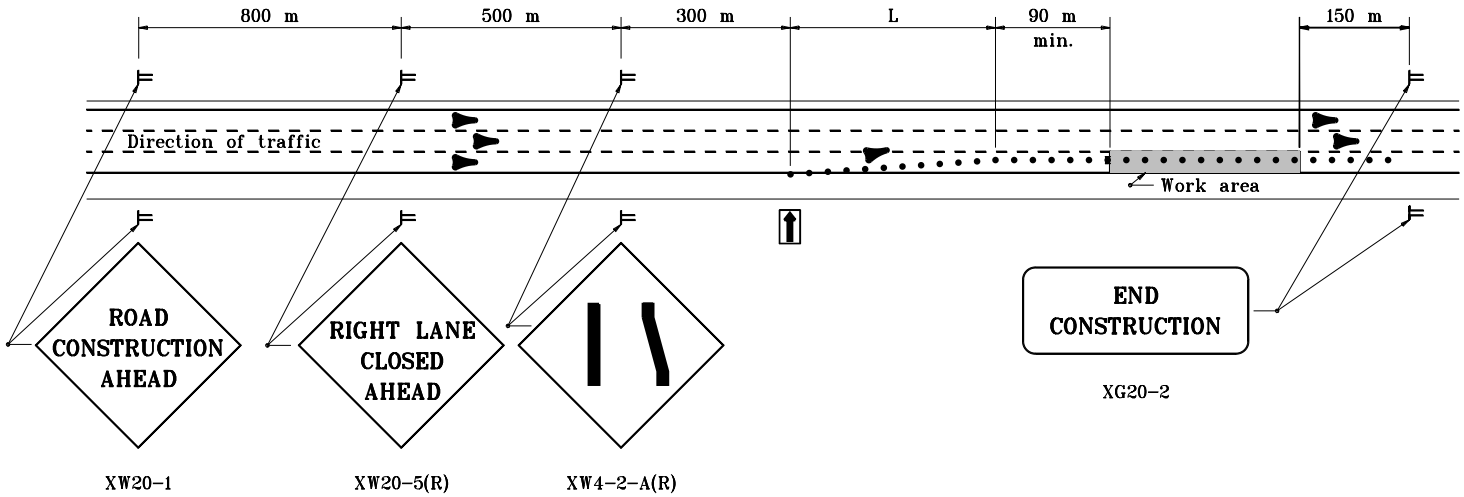

TYPICAL APPLICATION ON 6 - LANE DIVIDED HIGHWAY WHERE RIGHT LANE IS CLOSED

All dimensions are in mm unless otherwise specified.

INDIANA DEPARTMENT OF TRANSPORTATION

DAYLIGHT LANE CLOSURES
RIGHT LANE CLOSED

MAY 1997

STANDARD DRAWING NO. **801-TCLC-05**

ANTHONY L. UREMOVICH REGISTERED No. 18095 STATE OF INDIANA PROFESSIONAL ENGINEER

DESIGN STANDARDS ENGINEER

/s/ Anthony L. Uremovich 5-01-97
DESIGN STANDARDS ENGINEER DATE

/s/ Donald W. Lucas 5-01-97
CHIEF HIGHWAY ENGINEER DATE

Source Sheet: DET 1B

GENERAL NOTES

1. All lanes are to be open after daylight working hours.
2. See Standard Drawiog 801-TCLG-01 for standard notes and legend.