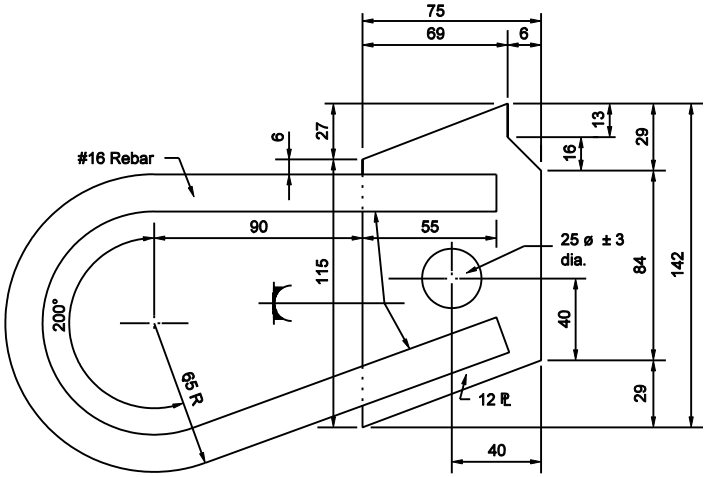

ANCHOR PLATE ALTERNATE D-1

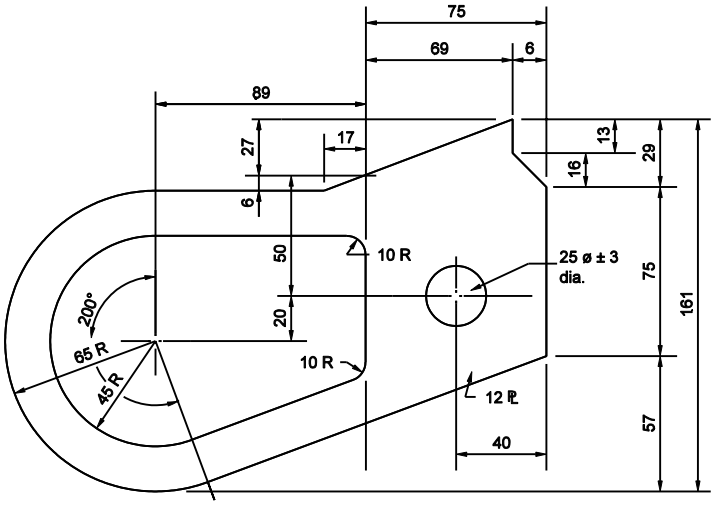

ANCHOR PLATE ALTERNATE D-2

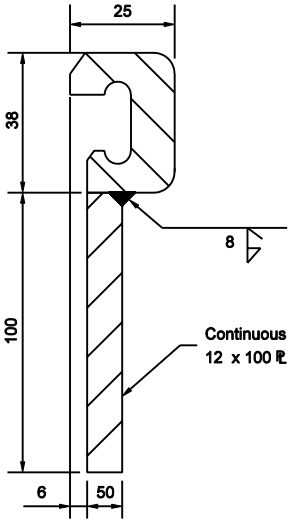

EXTRUSION & PLATE
ASSEMBLY DETAIL

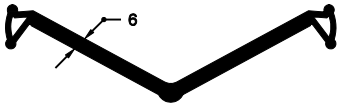

RJ-400 STRIP
SEAL GLAND

All Dimension are in mm unless otherwise specified

INDIANA DEPARTMENT OF TRANSPORTATION

EXPANSION JOINTS
CLASS SS (ALTERNATE D)

SEPTEMBER 2003

STANDARD DRAWING NO. 724-BSSJ-04A

RICHARD L. VanCLEAVE REGISTERED No. 9750 STATE OF INDIANA PROFESSIONAL ENGINEER
DESIGN STANDARDS ENGINEER

/s/ Richard L. VanCleave 9-02-03
DESIGN STANDARDS ENGINEER DATE

/s/ Richard K. Smutzer 9-02-03
CHIEF HIGHWAY ENGINEER DATE