GENERAL NOTES

1. This sheet shall be used in conjunction with Standard Drawing Nos. 724-BSSJ-05 through 09.
2. Allowable expansion lengths shall not be increased for skewed structures.

(3) Tool concrete edges to 5 to 10 radius.

(4) Anchors shall be spaced at 230 mm.

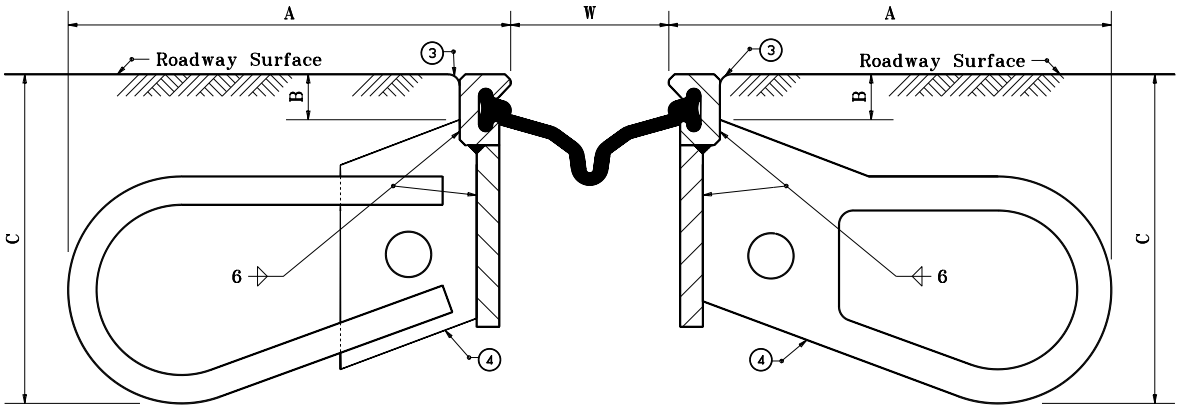

INSTALLATION DETAIL

JOINT SETTING TABLE

Ambient Temperature °C	DIMENSION W Expansion Length		
	30 m–60 m	60 m–90 m	90 m–120 m
50°	54	33	13
40°	62	44	29
25°	68	55	43
15°	76	67	57
5°	84	78	71
–5°	90	89	86
–15°	98	100	102

DIMENSIONS

ALTERNATES	A	B	C
A–1	248	25	185
A–2			
B–1	248	25	185
B–2			
C–1	248	30	185
C–2			

All dimensions are in mm unless otherwise specified.

INDIANA DEPARTMENT OF TRANSPORTATION

EXPANSION JOINTS
CLASS SS
JUNE 1996

STANDARD DRAWING NO. 724-BSSJ-04

ANTHONY L. UREMOVICH REGISTERED No. 18095 STATE OF INDIANA PROFESSIONAL ENGINEER

/s/ Anthony L. Uremovich 6/03/96
DESIGN STANDARDS ENGINEER DATE

/s/ Donald W. Lucas 6/03/96
CHIEF HIGHWAY ENGINEER DATE

DESIGN STANDARDS ENGINEER

Source Sheet: SS-1A