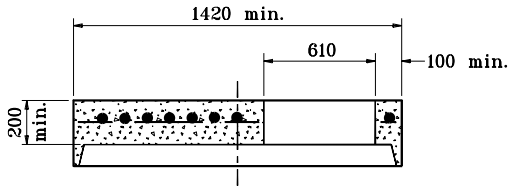

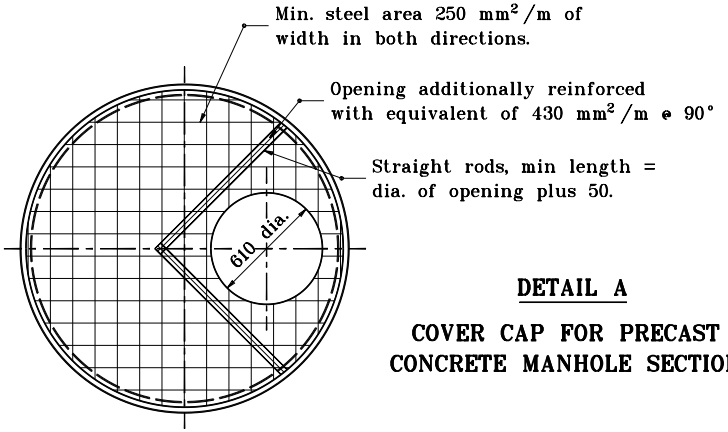

DETAIL A

COVER CAP FOR PRECAST CONCRETE MANHOLE SECTION

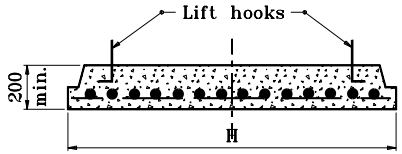

Section Dia.	H
1530	1830
1830	2190
2440	2900
2590	3080
2740	3250

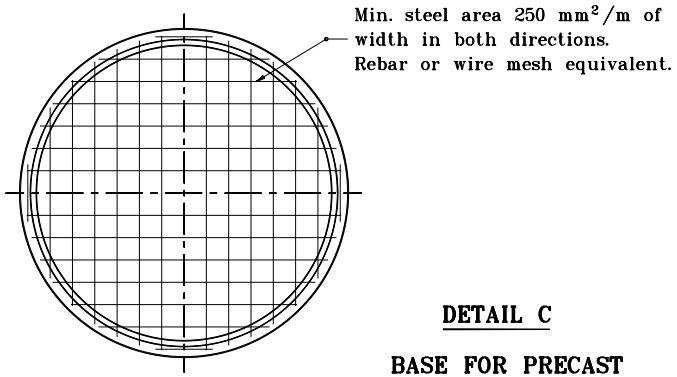

DETAIL C

BASE FOR PRECAST CONCRETE MANHOLE SECTIONS (1500 to 2700 DIA.)

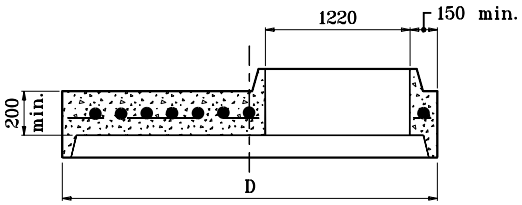

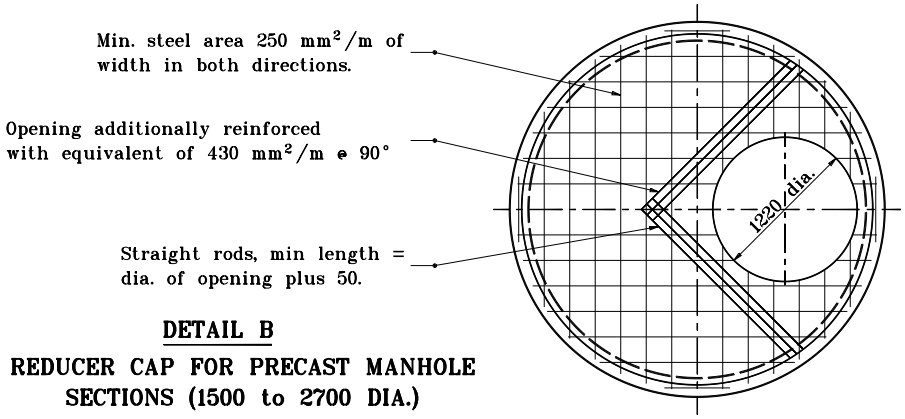

DETAIL B

REDUCER CAP FOR PRECAST MANHOLE SECTIONS (1500 to 2700 DIA.)

Section Dia.	D
1530	1830
1830	2190
2440	2900
2590	3080
2740	3250

Source Sheet: MD4

All dimensions are in mm unless otherwise specified.

INDIANA DEPARTMENT OF TRANSPORTATION

PRECAST CONCRETE MANHOLE SECTIONS

APRIL 1995

STANDARD DRAWING NO. **720-MHST-06**

ANTHONY L. UREMOVICH REGISTERED No. 18095 STATE OF INDIANA PROFESSIONAL ENGINEER

/s/ Anthony L. Uremovich 4/03/95
DESIGN STANDARDS ENGINEER DATE

/s/ Donald W. Lucas 4/03/95
CHIEF HIGHWAY ENGINEER DATE

DESIGN STANDARDS ENGINEER