GENERAL NOTES

(1) For eccentric and concentric cone heights see cone heights table on Standard Drawing 720-MHST-08.

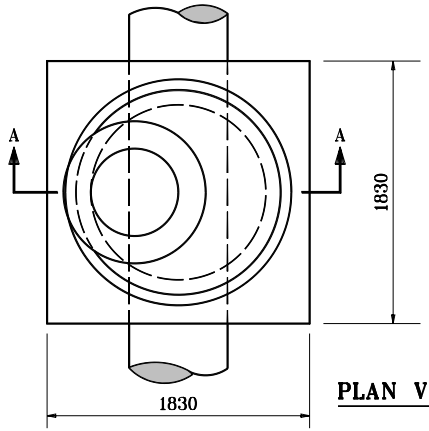

PLAN VIEW

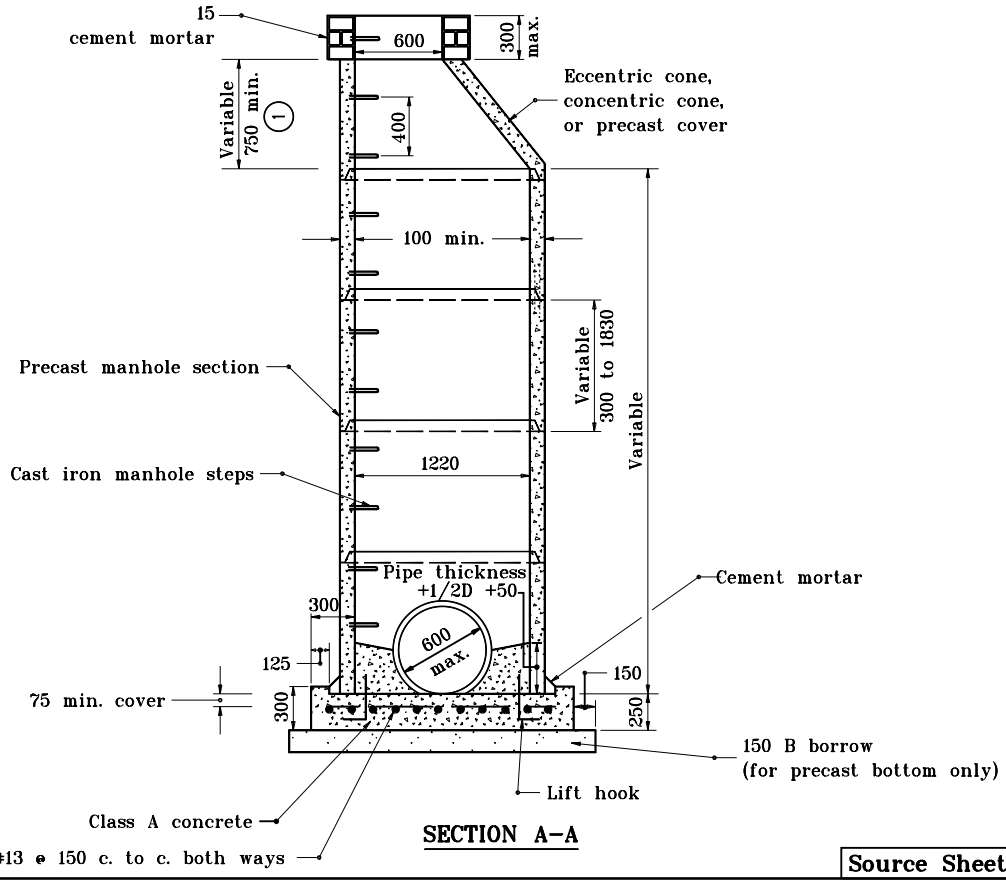

SECTION A-A

All dimensions are in mm unless otherwise specified.

INDIANA DEPARTMENT OF TRANSPORTATION

MANHOLE TYPE C

SEPTEMBER 1997

STANDARD DRAWING NO. **720-MHST-02**

ANTHONY L. UREMOVICH REGISTERED No. 18095 STATE OF INDIANA PROFESSIONAL ENGINEER

DESIGN STANDARDS ENGINEER

/s/ Anthony L. Uremovich 9-01-97
DESIGN STANDARDS ENGINEER DATE

/s/ Donald W. Lucas 9-01-97
CHIEF HIGHWAY ENGINEER DATE

Source Sheet: MD3