TYPE N INLET						
PIPE	6:1		8:1		10:1	
SIZE	A	B	A	B	A	B
300	550	130	550	220	550	280
375	630	210	630	310	630	370
450	710	290	710	390	710	450

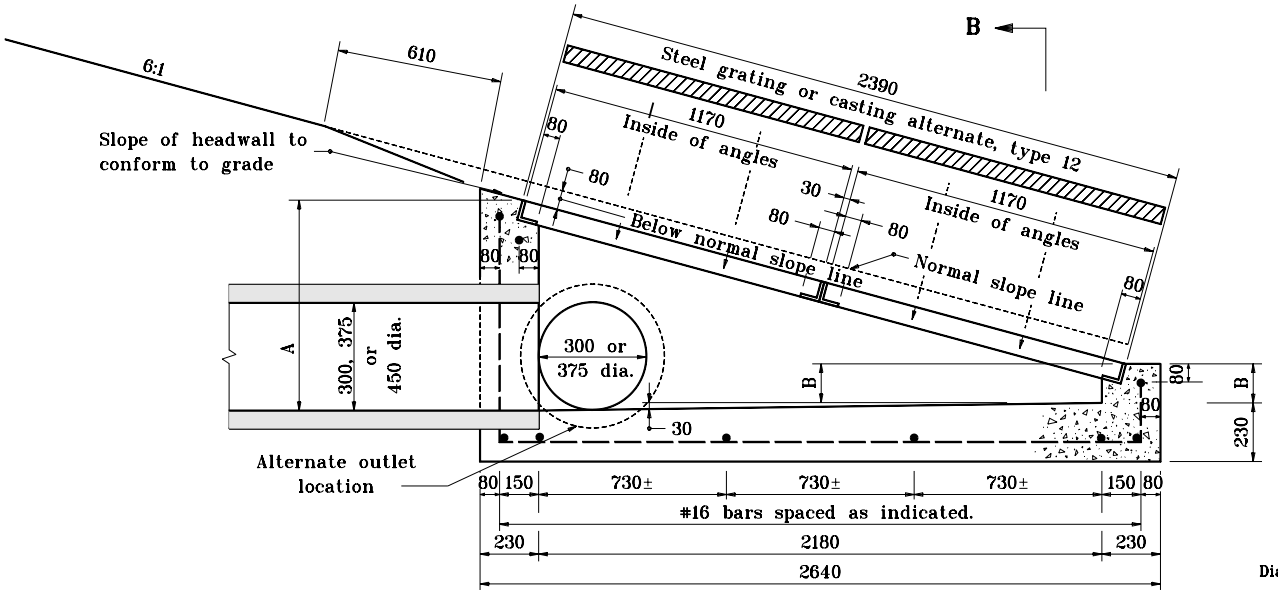

SECTION A–A

Showing Grate Slope of 6:1

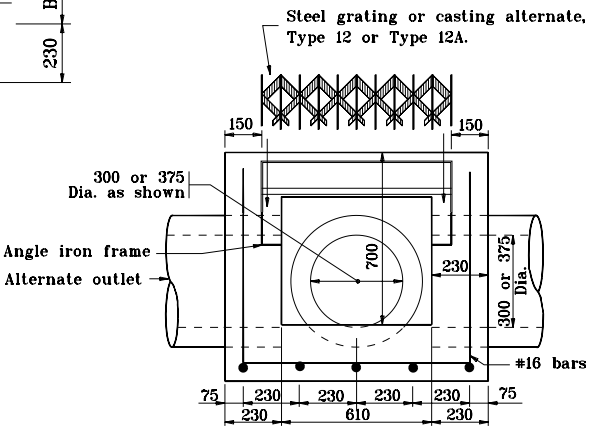

SECTION B–B

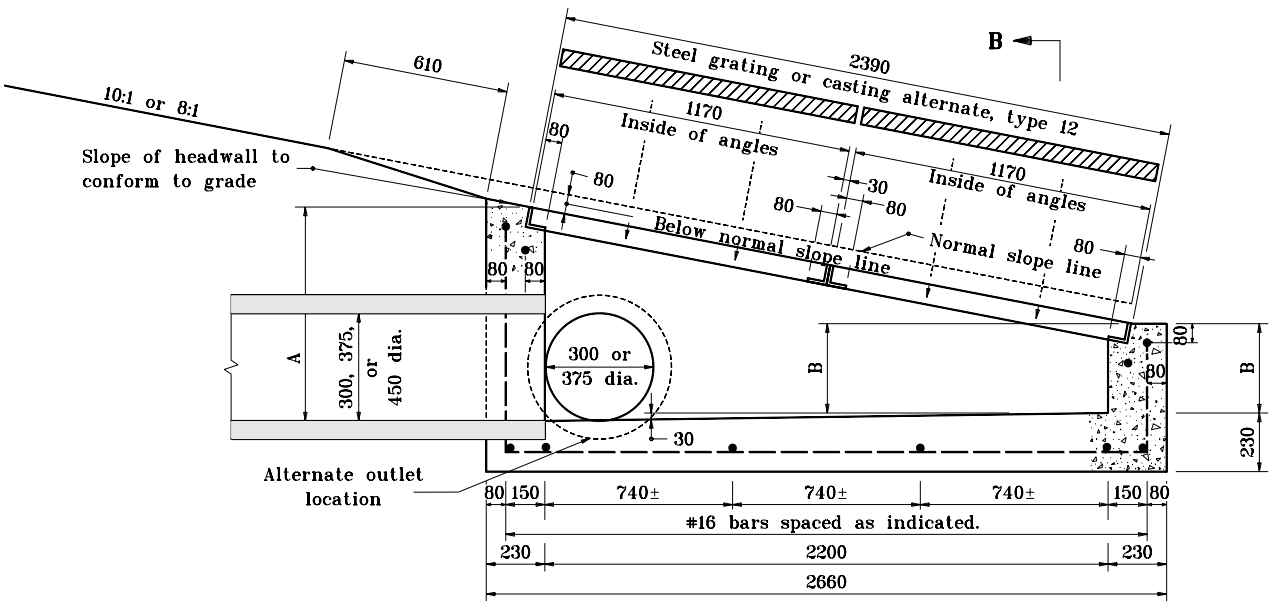

SECTION A–A

Showing Grate Slope of 8:1 or 10:1

All dimensions are in mm unless otherwise specified.

INDIANA DEPARTMENT OF TRANSPORTATION

INLET TYPE N

MAY 1998

STANDARD DRAWING NO. **720–INST–08**

ANTHONY L. UREMOVICH REGISTERED No. 18095 STATE OF INDIANA PROFESSIONAL ENGINEER

/s/ Anthony L. Uremovich 5-01-98
DESIGN STANDARDS ENGINEER DATE

/s/ Donald W. Lucas 5-01-98
CHIEF HIGHWAY ENGINEER DATE

Source Sheet: MS

DESIGN STANDARDS ENGINEER