GENERAL NOTES

1. Brick, block, or concrete may be used.
2. T = 200 for brick structure
   T = 150 for segmental block structure
3. If inlet pipe is required, A_1, B_1, A_2, and B_2 shall be increased or decreased 300 mm, as directed
4. 50 mm pipe drain from bottom of curb to inlet. Aggregate to be placed around inlet end of pipe.
5. 75 mm min. dia. pipe to be kept open for drainage of subgrade or base until surface is placed.

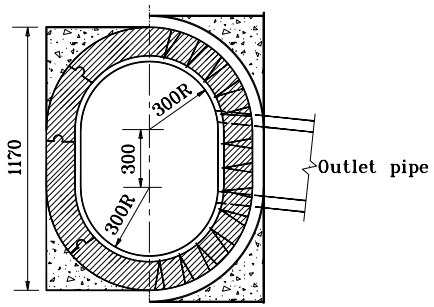

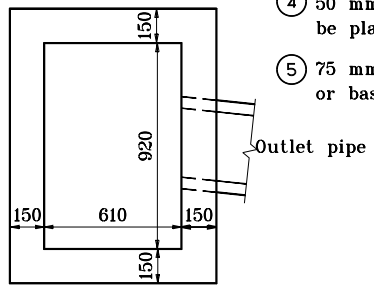

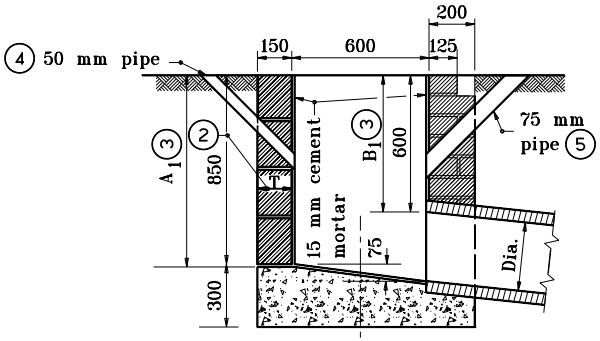

BRICK OR BLOCK

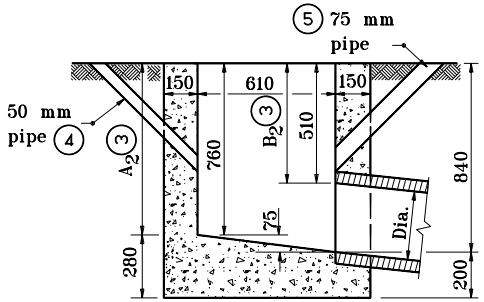

CONCRETE

All dimensions are in mm unless otherwise specified.

INDIANA DEPARTMENT OF TRANSPORTATION

INLET TYPE J

APRIL 1995

STANDARD DRAWING NO. **720-INST-06**

ANTHONY L. UREMOVICH REGISTERED No. 18095 STATE OF INDIANA PROFESSIONAL ENGINEER

/s/ Anthony L. Uremovich 4-03-95
DESIGN STANDARDS ENGINEER DATE

/s/ Donald W. Lucas 4-03-95
CHIEF HIGHWAY ENGINEER DATE

DESIGN STANDARDS ENGINEER

Source Sheet: MD