GENERAL NOTES

(1) If inlet pipe is required, this dimension shall be increased or decreased 300 as directed.

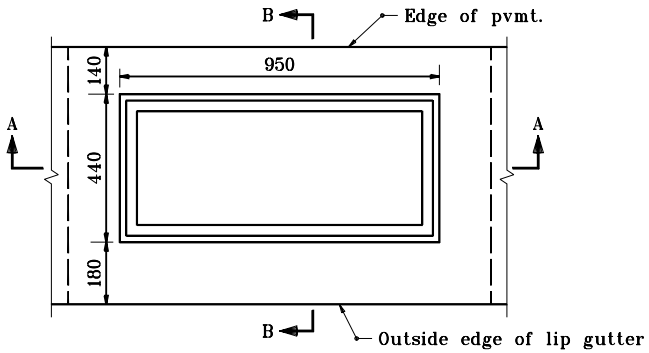

PLAN

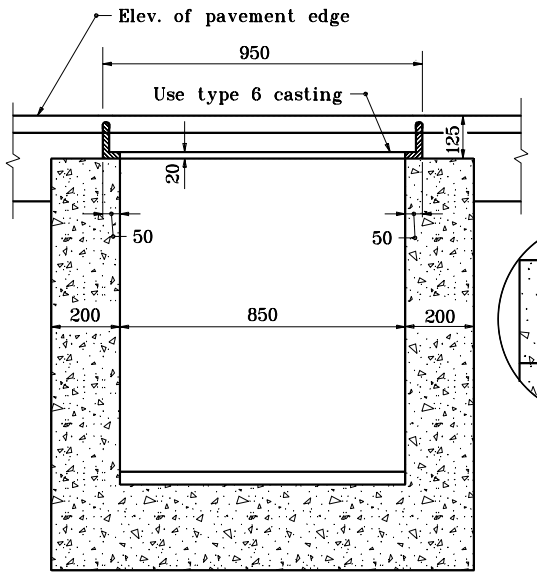

SECTION A–A

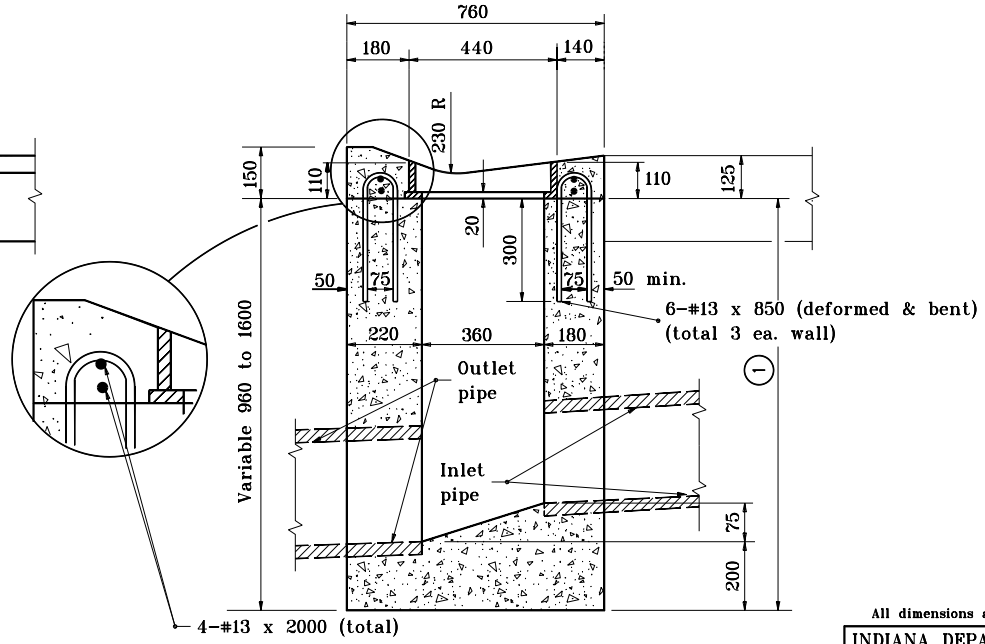

SECTION B–B

All dimensions are in mm unless otherwise specified.

INDIANA DEPARTMENT OF TRANSPORTATION

INLET TYPE D

SEPTEMBER 1997

STANDARD DRAWING NO. **720–INST–03**

ANTHONY L. UREMOVICH REGISTERED No. 18095 STATE OF INDIANA PROFESSIONAL ENGINEER

DESIGN STANDARDS ENGINEER

/s/ Anthony L. Uremovich 9–01–97
DESIGN STANDARDS ENGINEER DATE

/s/ Donald W. Lucas 9–01–97
CHIEF HIGHWAY ENGINEER DATE

Source Sheet: MD