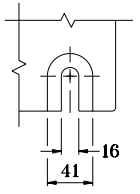

BOLT SLOT DETAIL

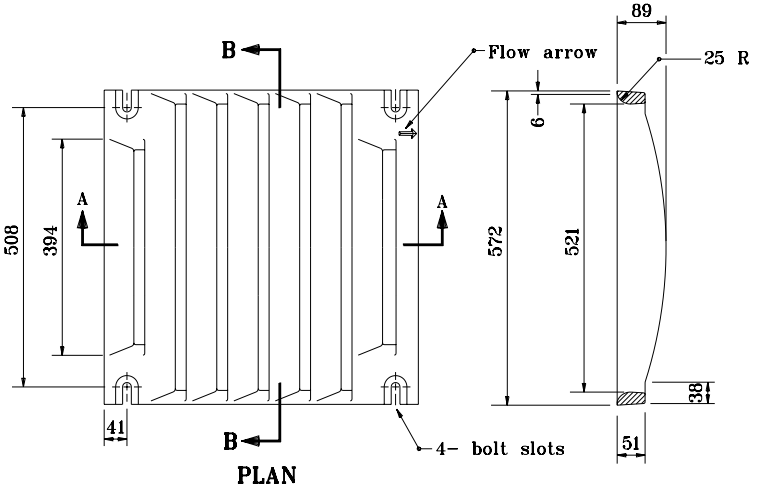

PLAN

SECTION B–B

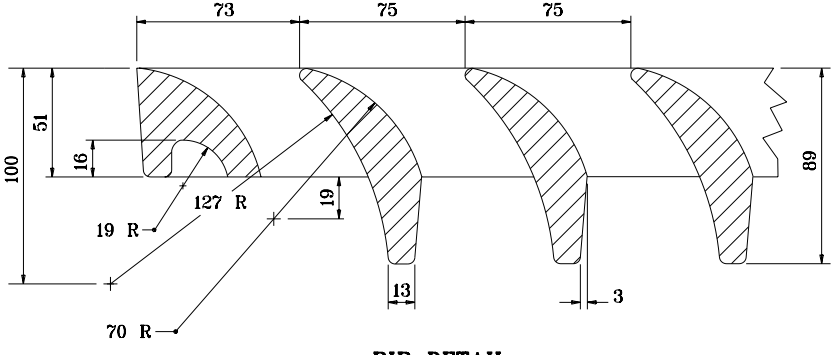

RIB DETAIL

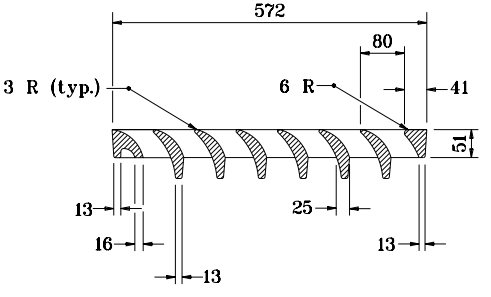

SECTION A–A

All dimensions are in mm unless otherwise specified.

INDIANA DEPARTMENT OF TRANSPORTATION

CASTING TYPE 15 GRATE

SEPTEMBER 1998

STANDARD DRAWING NO. **720–ICCA–17**

ANTHONY L. UREMOVICH REGISTERED No. 18095 STATE OF INDIANA PROFESSIONAL ENGINEER

DESIGN STANDARDS ENGINEER

/s/ Anthony L. Uremovich 9–01–98
DESIGN STANDARDS ENGINEER DATE

/s/ Donald W. Lucas 9–01–98
CHIEF HIGHWAY ENGINEER DATE

Source Sheet: MC2