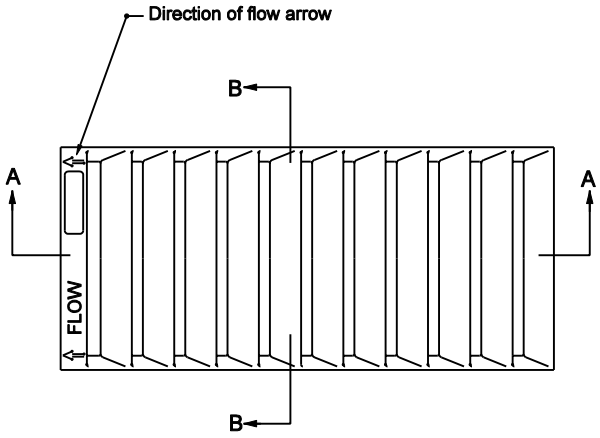

PLAN

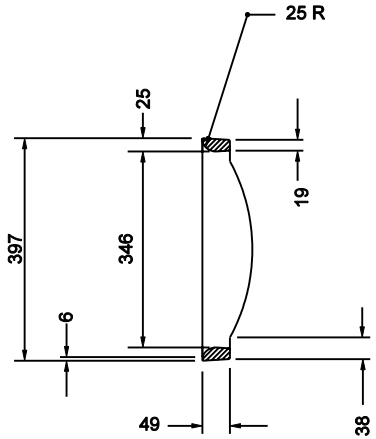

SECTION B-B

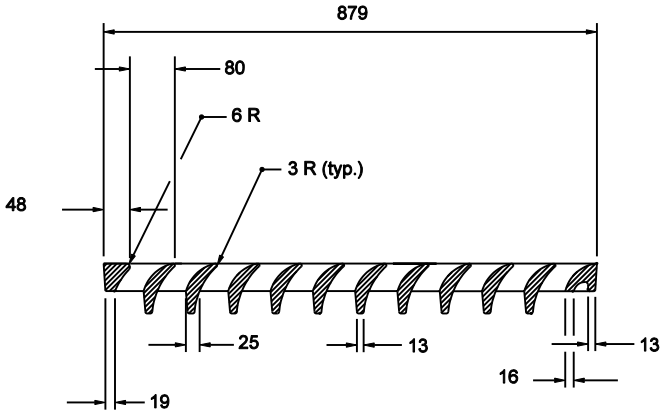

SECTION A-A

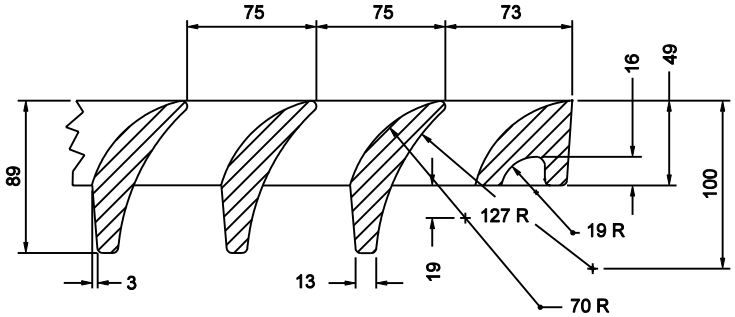

DETAIL OF SECTION A-A

GRATE
CASTING TYPE 10

All Dimension are in mm unless otherwise specfied

INDIANA DEPARTMENT OF TRANSPORTATION

CASTING TYPE 10
GRATE

SEPTEMBER 2003

STANDARD DRAWING NO. 720-ICCA-09

RICHARD L. VanCLEAVE
REGISTERED
No. 9750
STATE OF
INDIANA
PROFESSIONAL ENGINEER

DESIGN STANDARDS ENGINEER

/s/ Richard L. VanCleave 9-02-03
DESIGN STANDARDS ENGINEER DATE

/s/ Richard K. Smutzer 9-02-03
CHIEF HIGHWAY ENGINEER DATE