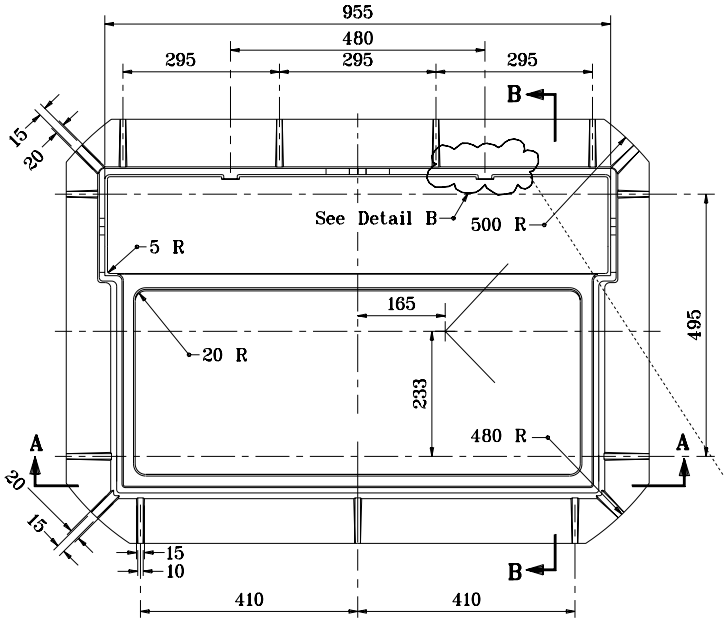

PLAN

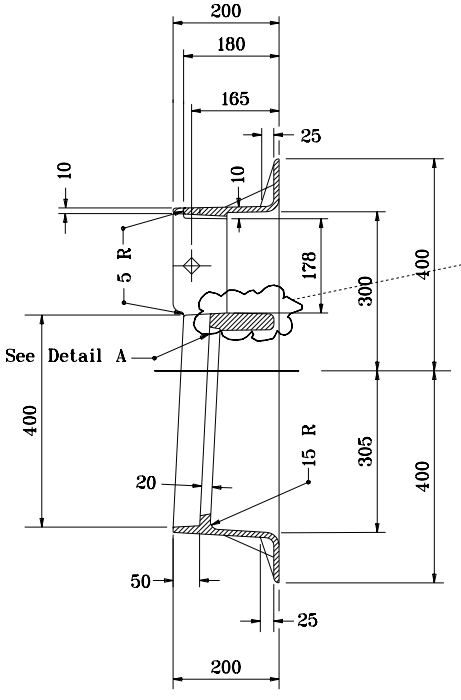

SECTION B–B

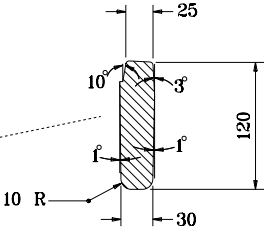

DETAIL A

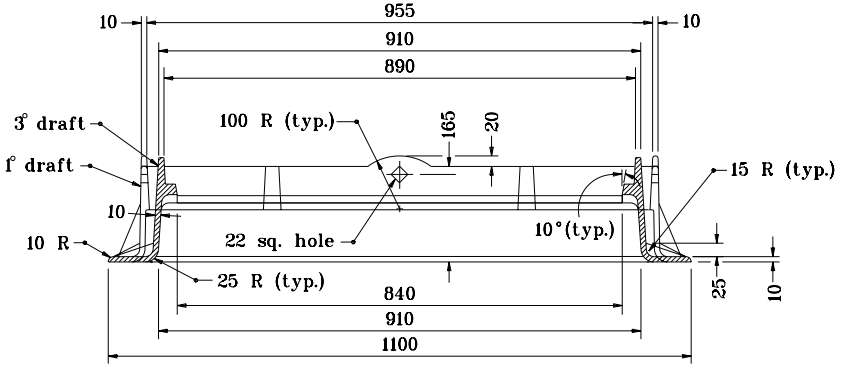

SECTION A–A

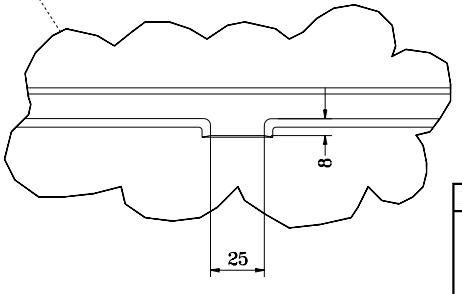

DETAIL B

All dimensions are in mm unless otherwise specified.

INDIANA DEPARTMENT OF TRANSPORTATION

CASTINGS TYPE 10
FRAME

SEPTEMBER 1998

STANDARD DRAWING NO. **720–ICCA–08**

ANTHONY L. UREMOVICH REGISTERED No. 18095 STATE OF INDIANA PROFESSIONAL ENGINEER

DESIGN STANDARDS ENGINEER

/s/ Anthony L. Uremovich 9–01–98
DESIGN STANDARDS ENGINEER DATE

/s/ Donald W. Lucas 9–01–98
CHIEF HIGHWAY ENGINEER DATE

Source Sheet: MC1