Grate is bolted to
frame with 14 hex head
SS bolts. 4 req'd. each grate.

BARRIER SIDE

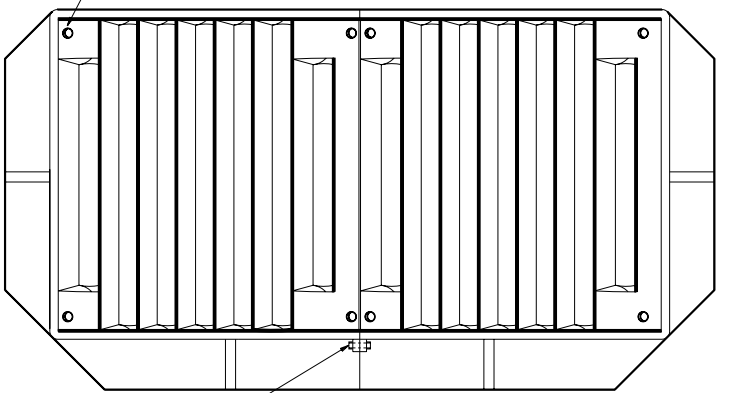

4-16 dia. bolts

Left hand flow

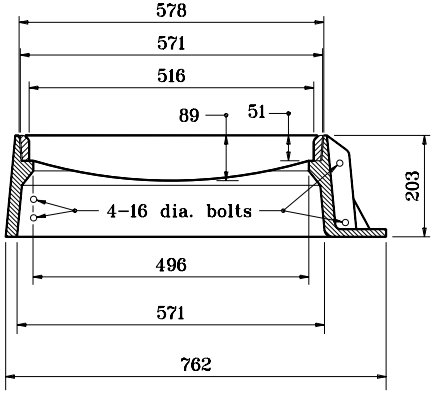

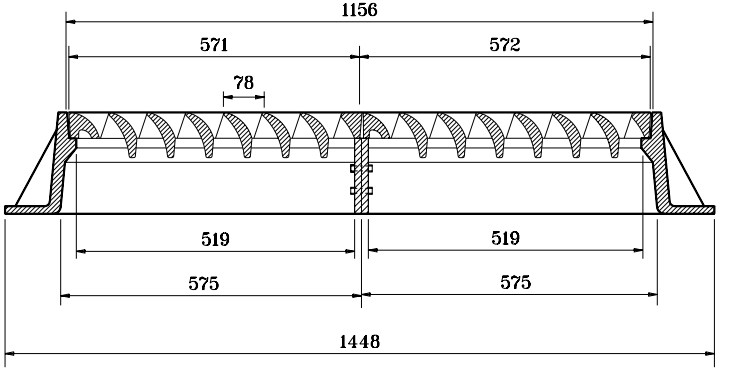

FRAME AND GRATE
CASTING TYPE 5 (ALTERNATE)

All dimensions are in mm unless otherwise specified.

INDIANA DEPARTMENT OF TRANSPORTATION

CASTING TYPE 5 (ALTERNATE)
FRAME AND GRATE
SEPTEMBER 2001

STANDARD DRAWING NO. **720-ICCA-03**

ANTHONY L. UREMOVICH REGISTERED No. 18095 STATE OF INDIANA PROFESSIONAL ENGINEER

DESIGN STANDARDS ENGINEER

/s/ Anthony L. Uremovich 9-04-01
DESIGN STANDARDS ENGINEER DATE

/s/ Firooz Zandi 9-04-01
CHIEF HIGHWAY ENGINEER DATE