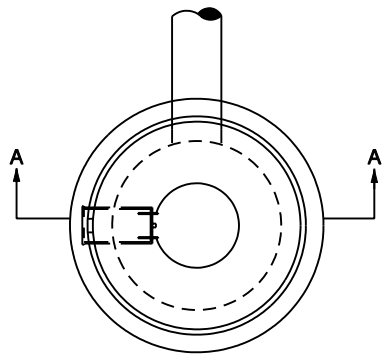

NOTES:

1. Concentric concrete section will not be permited on any manhole that will be under the jurisdiction of the Indianapolis Sanitary District
2. The contractor will be premitted to substitute precast catch basin type "W" for catch basin type "A".

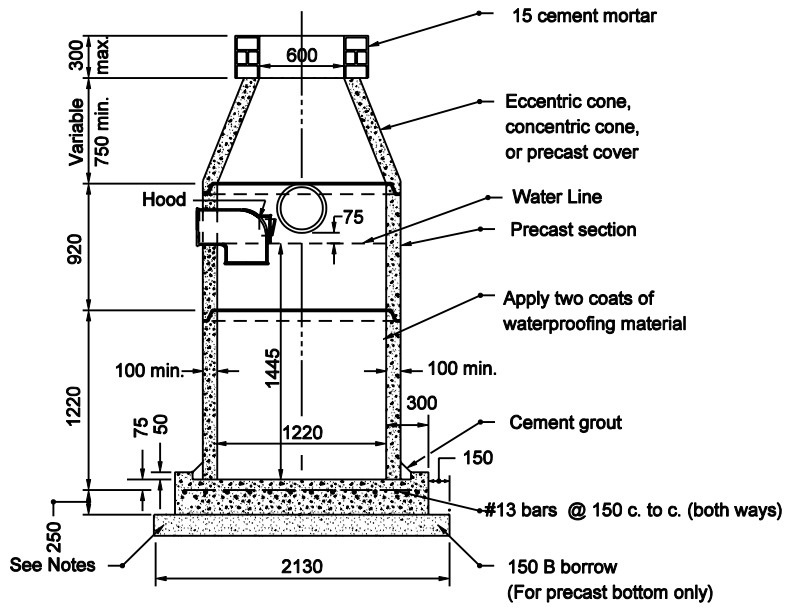

SECTION A-A

All Dimension are in mm unless otherwise specfied

INDIANA DEPARTMENT OF TRANSPORTATION

CATCH BASIN
TYPE W

SEPTEMBER 2003

STANDARD DRAWING NO. 720-CBST-08

RICHARD L. VanCLEAVE REGISTERED No. 9750 STATE OF INDIANA PROFESSIONAL ENGINEER

DESIGN STANDARDS ENGINEER

/s/ Richard L. VanCleave 9-02-03
DESIGN STANDARDS ENGINEER DATE

/s/ Richard K. Smutzer 9-02-03
CHIEF HIGHWAY ENGINEER DATE