GENERAL NOTES

1. Toe plate extension is to be the same thickness as the end section. Dimension shall be end section overall width less 150.
2. Transverse safety bars shall be Schedule 40 galvanized steel pipe. Pipe to be galvanized after forming. Number of bars req'd will vary depending on the length of the end section.
3. See Standard Drawing 715-SMES-11 for Section A-A.
4. See Standard Drawing 715-SMES-12 for variable dimensions.

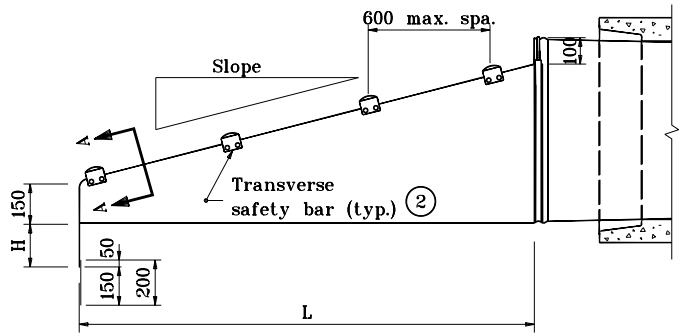

SIDE ELEVATION OF PARALLEL STRUCTURE END SECTION

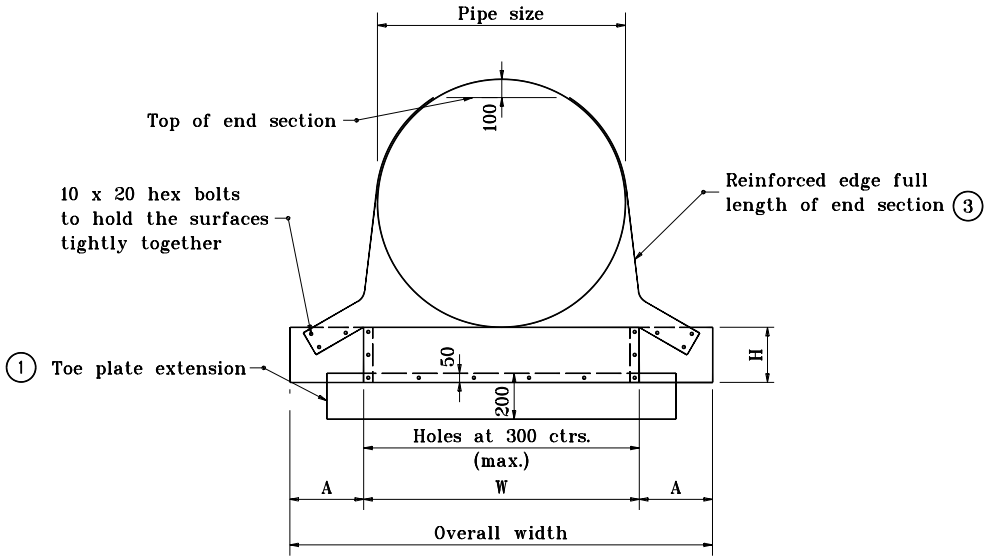

FRONT VIEW

All dimensions are in mm unless otherwise specified.

INDIANA DEPARTMENT OF TRANSPORTATION

SAFETY METAL CULVERT END SECTIONS FOR SMOOTH PIPE

JANUARY 1998

STANDARD DRAWING NO. **715-SMES-10**

ANTHONY L. UREMOVICH REGISTERED No. 18095 STATE OF INDIANA PROFESSIONAL ENGINEER

DESIGN STANDARDS ENGINEER

/s/ Anthony L. Uremovich 1-02-98
DESIGN STANDARDS ENGINEER DATE

/s/ Donald W. Lucas 1-02-98
CHIEF HIGHWAY ENGINEER DATE

Source Sheet: SMES4