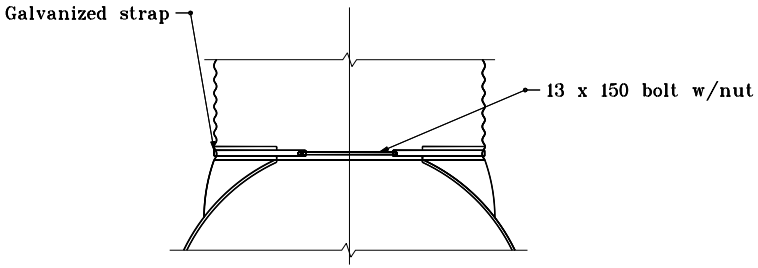

TYPE 1 CONNECTOR DETAIL

Through 600 dia.

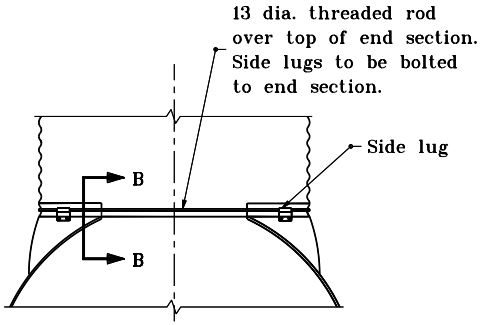

TYPE 2 CONNECTOR DETAIL

For all circular pipes larger than 600
and all pipe-arches

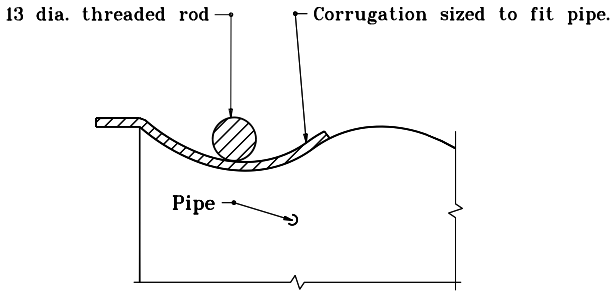

SECTION B-B

GENERAL NOTES

1. For circular pipe diameters through 600, attach end section to pipe with type 1 connector. For all other sizes, attach end section to pipe with type 2 connector.

All dimensions are in mm unless otherwise specified.

INDIANA DEPARTMENT OF TRANSPORTATION

SAFETY METAL CULVERT END SECTIONS FOR CORRUGATED PIPE

JANUARY 1998

STANDARD DRAWING NO. **715-SMES-03**

ANTHONY L. UREMOVICH REGISTERED No. 18095 STATE OF INDIANA PROFESSIONAL ENGINEER

DESIGN STANDARDS ENGINEER

/s/ Anthony L. Uremovich 1-02-98
DESIGN STANDARDS ENGINEER DATE

/s/ Donald W. Lucas 1-02-98
CHIEF HIGHWAY ENGINEER DATE

Source Sheet: SMES1