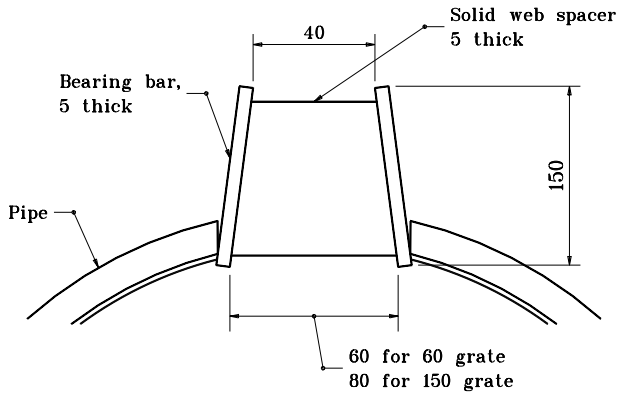

SECTION A–A
STANDARD GRATE DETAIL

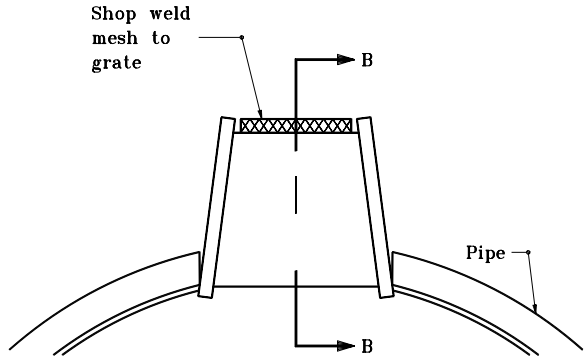

SECTION A–A
GRATE DETAIL WITH MESH

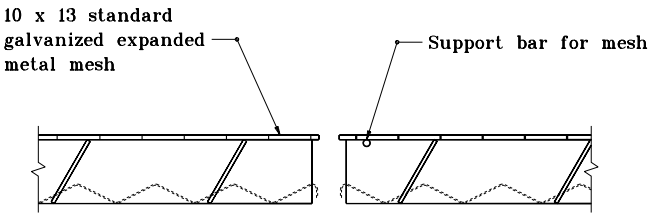

SECTION B–B

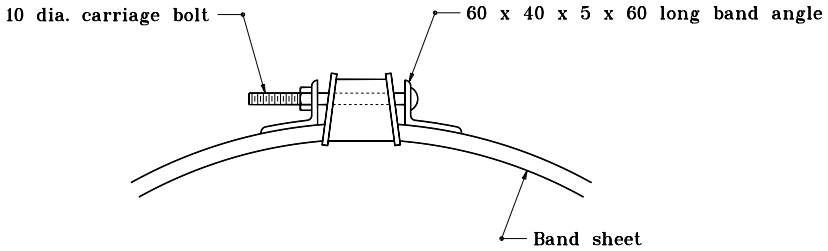

SECTION C–C

STANDARD SIZES						
PIPE THICK-NESS	DIAMETER OF PIPE					
	300	375	450	600	750	900
1.63	X	X	X	X	X	X
2.01	X	X	X	X	X	X
2.77	N.A.	N.A.	N.A.	N.A.	X	X

X – Size available for designated thickness

N.A. – Size not available for designated thickness

All dimensions are in mm unless otherwise specified.

INDIANA DEPARTMENT OF TRANSPORTATION

SLOTTED DRAIN PIPE

JANUARY 1998

STANDARD DRAWING NO. **715–SLDR–02**

ANTHONY L. UREMOVICH REGISTERED No. 18095 STATE OF INDIANA PROFESSIONAL ENGINEER

DESIGN STANDARDS ENGINEER

/s/ Anthony L. Uremovich 1–02–98
DESIGN STANDARDS ENGINEER DATE

/s/ Donald W. Lucas 1–02–98
CHIEF HIGHWAY ENGINEER DATE

Source Sheet: NONE