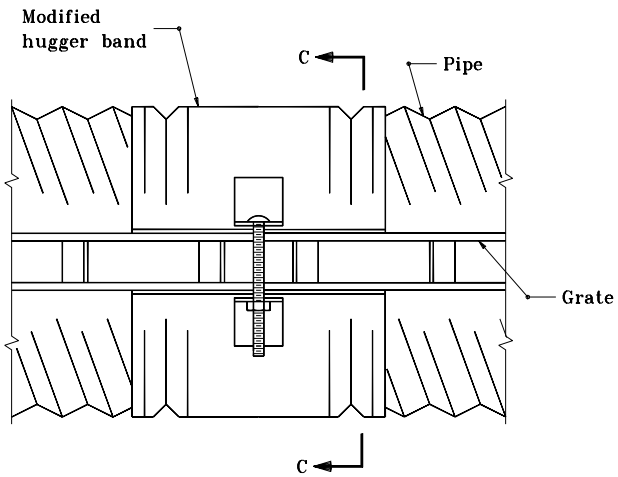

MODIFIED HUGGER BAND
TOP VIEW

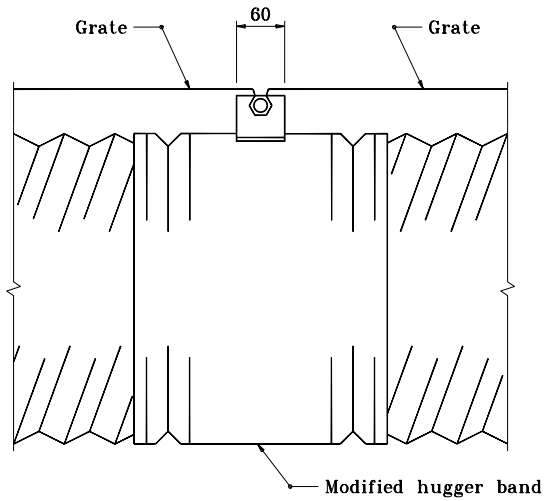

MODIFIED HUGGER BAND
SIDE VIEW

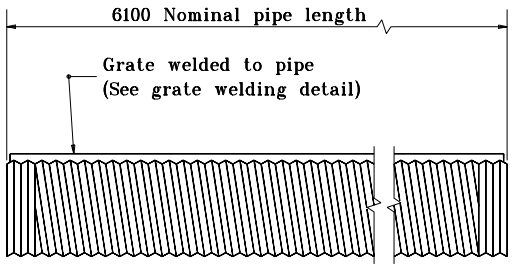

TYPICAL PIPE SECTION

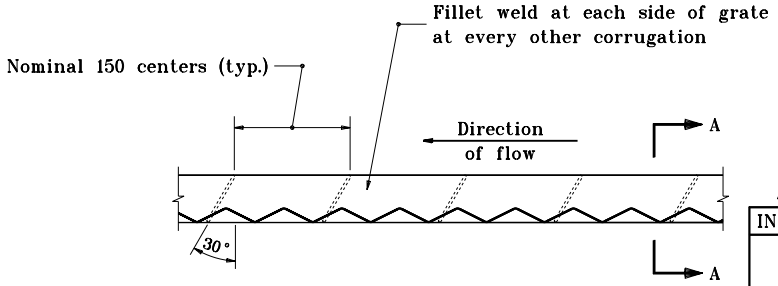

GRATE WELDING DETAIL

All dimensions are in mm unless otherwise specified.

INDIANA DEPARTMENT OF TRANSPORTATION

SLOTTED DRAIN PIPE

APRIL 1995

STANDARD DRAWING NO. **715-SLDR-01**

ANTHONY L. UREMOVICH REGISTERED No. 18095 STATE OF INDIANA PROFESSIONAL ENGINEER

DESIGN STANDARDS ENGINEER

/s/ Anthony L. Uremovich 4-03-95
DESIGN STANDARDS ENGINEER DATE

/s/ Donald W. Lucas 4-03-95
CHIEF HIGHWAY ENGINEER DATE

Source Sheet: NONE